1. DESCRIPTION

The XL/XD7219/XL/XD7221 are compact, serial input/ output common-cathode display drivers that interface microprocessors (µPs) to 7-segment numeric LED displays of up to 8 digits, bar-graph displays, or 64 individual LEDs. Included on-chip are a BCD code-B decoder, multiplex scan circuitry, segment and digit drivers, and an 8x8 static RAM that stores each digit. Only one external resistor is required to set the segment current for all LEDs. The XL/XD7221 is compatible with SPI, QSPI, and MICROWIRE, and has slew-rate-limited segment drivers to reduce EMI.

A convenient 4-wire serial interface connects to all common µPs. Individual digits may be addressed and updated without rewriting the entire display. The XL/XD7219/XL/XD7221 also allow the user to select code-B decoding or no-decode for each digit.

The devices include a 150µA low-power shutdown mode, analog and digital brightness control, a scan-limit register that allows the user to display from 1 to 8 digits, and a test mode that forces all LEDs on.

2. FEATURES

- 10MHz Serial Interface
- Individual LED Segment Control
- Decode/No-Decode Digit Selection
- 150µA Low-Power Shutdown (Data Retained)
- Digital and Analog Brightness Control
- Display Blanked on Power-Up
- Drive Common-Cathode LED Display
- Slew-Rate Limited Segment Drivers for Lower EMI (XL/XD7221)
- SPI, QSPI, MICROWIRE Serial Interface (XL/XD7221)

3. APPLICATIONS

- Bar-Graph Displays
- Industrial Controllers
- Panel Meters
- LED Matrix Displays

4. PIN CONFIGURATIONS

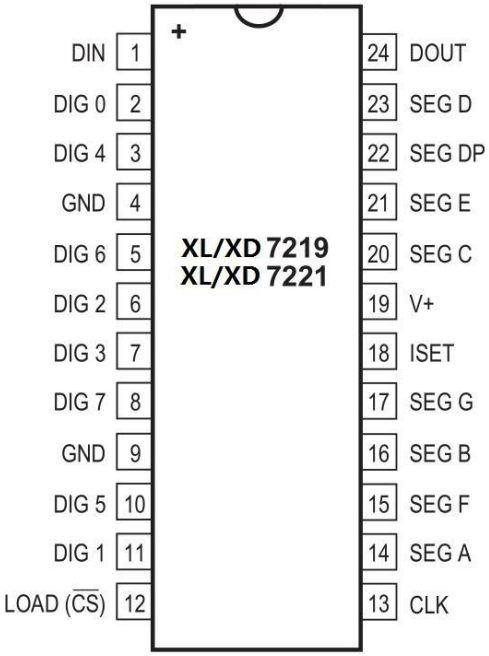

(Top View)

5. TYPICAL APPLICATION CIRCUIT

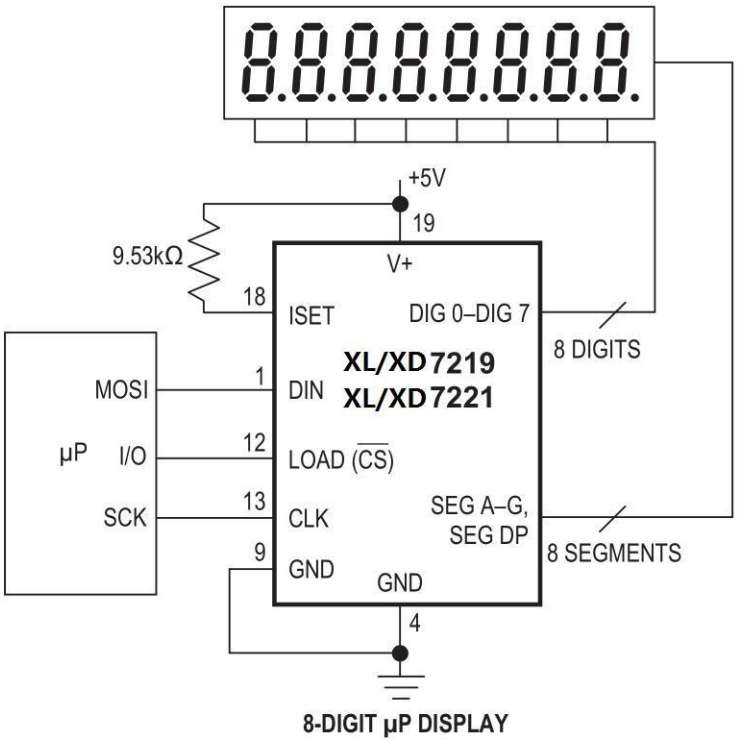

8-DIGIT µP DISPLAY

6. ABSOLUTE XL/XDIMUM RATINGS

Voltage(with respect to GND)
V+.....V to 6V
DIN, CLK, LOAD, CS.....V to 6V
All Other Pins..... 0.3V to (V+ + 0.3V)
Current
DIG 0–DIG 7 Sink Current..... 500mA
SEG A–G, DP Source Current.....100mA
Continuous Power Dissipation (T_A = +85°C)
Narrow Plastic DIP (derate 13.3mW/°C above +70°C)..... 1066mW
Wide SO (derate 11.8mW/°C above +70°C).....941mW
Narrow CERDIP (derate 12.5mW/°C above +70°C)..... 1000mW

Operating Temperature Ranges (T_{MIN} to $T_{XL/XD}$)
XL/XD7219 XL/XD7221..... -40°C to +85°C
Storage Temperature Range..... ..-65°C to +160°C
Lead Temperature (soldering, 10s).....+300°C

7. ELECTRICAL CHARACTERISTICS

(V+ = 5V ±10%, R_{SET} = 9.53kΩ ±1%, T_A = T_{MIN} to $T_{XL/XD}$, unless otherwise noted.)

PARAMETER	SYMBOL	CONDITIONS	MIN	TYP	MAX	UNITS
Operating Supply Voltage	V+		4.0		5.5	V
Shutdown Supply Current	I+	All digital inputs at V+ or GND, T_A = +25°C			150	µA
Operating Supply Current	I+	R_{SET} = open circuit			8	mA
		All segments and decimal point on, $I_{SEG_}$ = -40mA		330		
Display Scan Rate	f_{OSC}	8 digits scanned	500	800	1300	Hz
Digit Drive Sink Current	I_{DIGIT}	V+ = 5V, V_{OUT} = 0.65V	320			mA
Segment Drive Source Current	I_{SEG}	T_A = +25°C, V+ = 5V, V_{OUT} = (V+ - 1V)	-30	-40	-45	mA
Segment Current Slew Rate (XL/XD7221 only)	$\Delta I_{SEG}/\Delta t$	T_A = +25°C, V+ = 5V, V_{OUT} = (V+ - 1V)	10	20	50	mA/µs
Segment Drive Current Matching	ΔI_{SEG}			3.0		%
Digit Drive Leakage (XL/XD7221 only)	I_{DIGIT}	Digit off, V_{DIGIT} = V+			-10	µA
Segment Drive Leakage (XL/XD7221 only)	I_{SEG}	Segment off, V_{SEG} = 0V			1	µA
Digit Drive Source Current (XL/XD7219 only)	I_{DIGIT}	Digit off, V_{DIGIT} = (V+ - 0.3V)	-2			mA
Segment Drive Sink Current (XL/XD7219 only)	I_{SEG}	Segment off, V_{SEG} = 0.3V	5			mA

Electrical Characteristics (continued)

(V+ = 5V ±10%, R_{SET} = 9.53kΩ ±1%, T_A = T_{MIN} to $T_{XL/XD}$, unless otherwise noted.)

PARAMETER	SYMBOL	CONDITIONS	MIN	TYP	MAX	UNITS
LOGIC INPUTS						
Input Current DIN, CLK, LOAD, CS	I_{IH}, I_{IL}	V_{IN} = 0V or V+	-1		1	μA
Logic High Input Voltage	V_{IH}		3.5			V
Logic Low Input Voltage	V_{IL}				0.8	V
Output High Voltage	V_{OH}	DOUT, I_{SOURCE} = -1mA	V+ - 1			V
Output Low Voltage	V_{OL}	DOUT, I_{SINK} = 1.6mA			0.4	V
Hysteresis Voltage	ΔV_I	DIN, CLK, LOAD, CS		1		V
TIMING CHARACTERISTICS						
CLK Clock Period	t_{CP}		100			ns
CLK Pulse Width High	t_{CH}		50			ns
CLK Pulse Width Low	t_{CL}		50			ns
CS Fall to SCLK Rise Setup Time (XL/XD7221 only)	t_{CSS}		25			ns
CLK Rise to CS or LOAD Rise Hold Time	t_{CSH}		0			ns
DIN Setup Time	t_{DS}		25			ns
DIN Hold Time	t_{DH}		0			ns
Output Data Propagation Delay	t_{DO}	C_{LOAD} = 50pF			25	ns
Load-Rising Edge to Next Clock Rising Edge (XL/XD7219 only)	t_{LDCK}		50			ns
Minimum CS or LOAD Pulse High	t_{CSW}		50			ns
Data-to-Segment Delay	t_{DSPD}				2.25	ms

8. TYPICAL OPERATING CHARACTERISTICS

(V+ = +5V, T_A = +25°C, unless otherwise noted.)

SCAN FREQUENCY vs. POSITIVE SUPPLY VOLTAGE

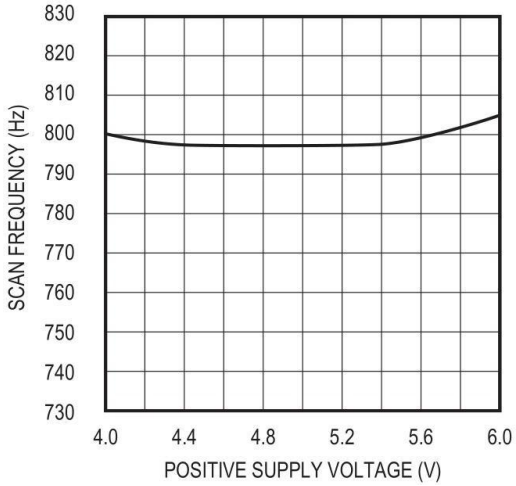

SEGMENT DRIVER OUTPUT CURRENT vs. OUTPUT VOLTAGE

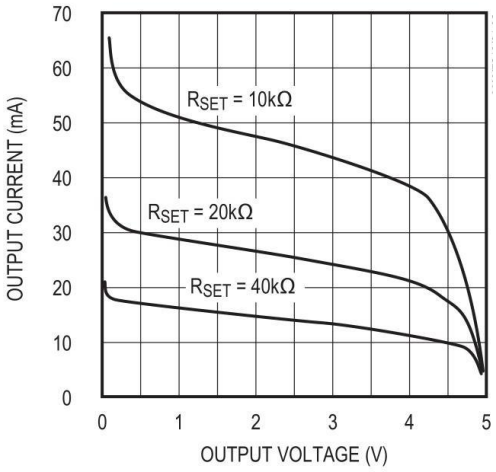

XL/XD7219 SEGMENT OUTPUT CURRENT

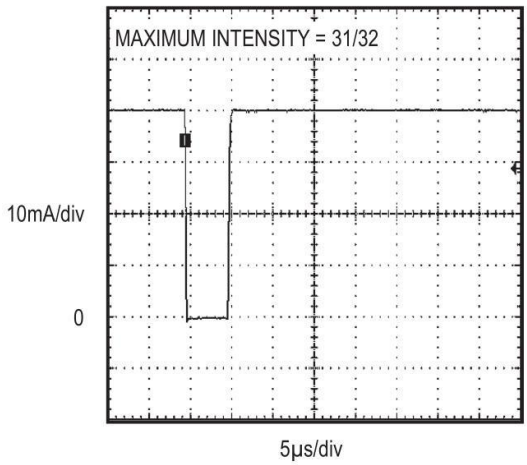

XL/XD7221 SEGMENT OUTPUT CURRENT

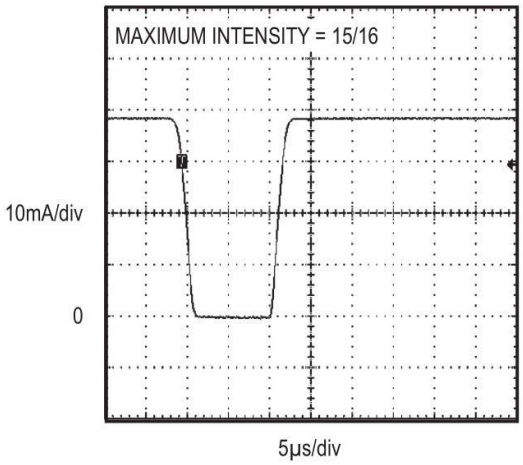

9. PIN DESCRIPTION

PIN	NAME	FUNCTION
1	DIN	Serial-Data Input. Data is loaded into the internal 16-bit shift register on CLK's rising edge.
2, 3, 5–8, 10, 11	DIG 0–DIG 7	Eight-digit drive lines that sink current from the display common cathode. The XL/XD7219 pulls the digit outputs to V+ when turned off. The XL/XD7221's digit drivers are high-impedance when turned off.
4, 9	GND	Ground. Both GND pins must be connected.
12	LOAD (XL/XD7219)	Load-Data Input. The last 16 bits of serial data are latched on LOAD's rising edge.
	CS (XL/XD 7221)	Chip-Select Input. Serial data is loaded into the shift register while CS is low. The last 16 bits of serial data are latched on CS's rising edge.
13	CLK	Serial-Clock Input. 10MHz maximum rate. On CLK's rising edge, data is shifted into the internal shift register. On CLK's falling edge, data is clocked out of DOUT. On the XL/XD7221, the CLK input is active only while CS is low.
14–17, 20–23	SEG A–SEG G, DP	Seven Segment Drives and Decimal Point Drive that source current to the display. On the XL/XD7219, when a segment driver is turned off it is pulled to GND. The XL/XD7221 segment drivers are high-impedance when turned off.
18	ISET	Connect to V_{DD} through a resistor (R_{SET}) to set the peak segment current (Refer to *Selecting R_{SET} Resistor and Using External Drivers* section).
19	V+	Positive Supply Voltage. Connect to +5V.
24	DOUT	Serial-Data Output. The data into DIN is valid at DOUT 16.5 clock cycles later. This pin is used to daisy-chain several XL/XD7219/XL/XD7221's and is never high-impedance.

10. FUNCTIONAL DIAGRAM

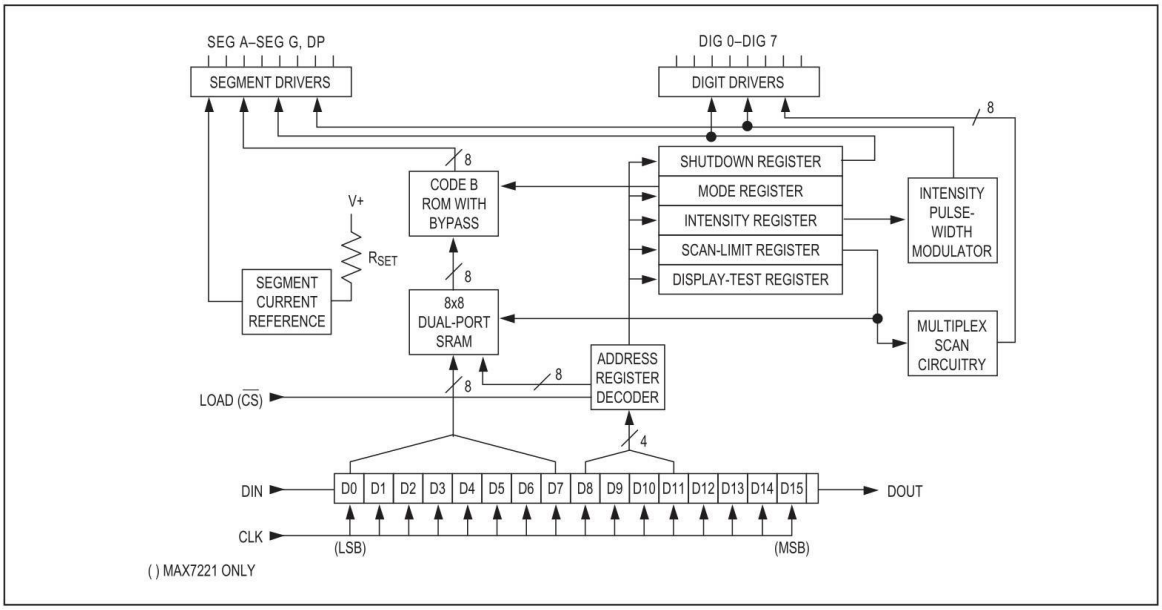

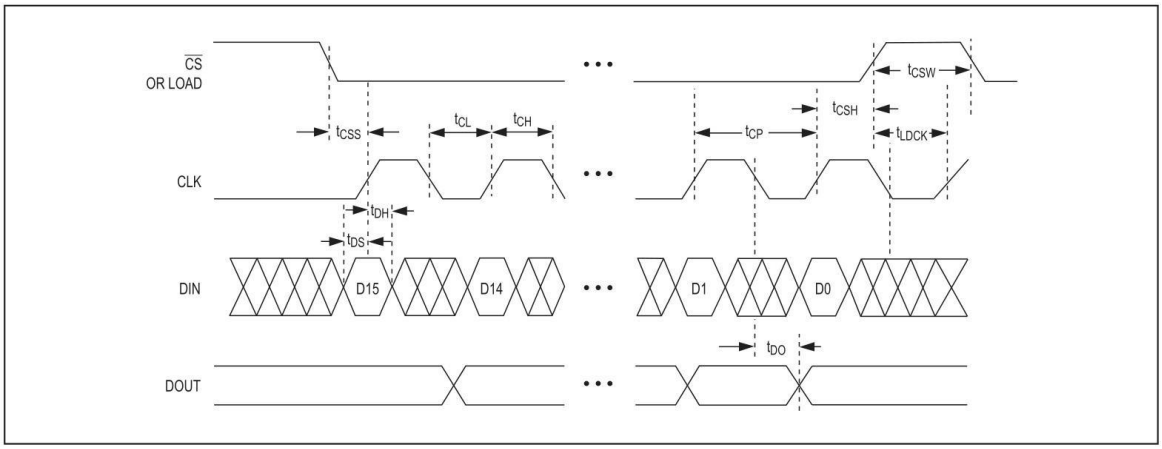

Figure 1. Timing Diagram

TABLE 1.SERIAL-DATA FORMAT (16 BITS)

D15	D14	D13	D12	D11	D10	D9	D8	D7	D6	D5	D4	D3	D2	D1	D0
X	X	X	X	ADDRESS				MSB	DATA						LSB

11. DETAILED DESCRIPTION

XL/XD7219 ; XL/XD7221 Differences

The XL/XD7219 and XL/XD7221 are identical except for two parameters: the XL/XD7221 segment drivers are slew-rate limited to reduce electromagnetic interference (EMI), and its serial interface is fully SPI compatible.

Serial-Addressing Modes

For the XL/XD7219, serial data at DIN, sent in 16-bit packets, is shifted into the internal 16-bit shift register with each rising edge of CLK regardless of the state of LOAD. For the XL/XD7221, CS must be low to clock data in or out. The data is then latched into either the digit or control registers on the rising edge of LOAD/CS. LOAD/CS must go high concurrently with or after the 16th rising clock edge, but before the next rising clock edge or data will be lost. Data at DIN is propagated through the shift register and appears at DOUT 16.5 clock cycles later. Data is clocked out on the falling edge of CLK. Data bits are labeled D0–D15 (Table 1). D8–D11 contain the register address. D0–D7 contain the data, and D12–D15 are “don’t care” bits. The first received is D15, the most significant bit (MSB).

Digit and Control Registers

Table 2 lists the 14 addressable digit and control registers. The digit registers are realized with an on-chip, 8x8 dual-port SRAM. They are addressed directly so that individual digits can be updated and retain data as long as V+ typically exceeds 2V. The control registers consist of decode mode, display intensity, scan limit (number of scanned digits), shutdown, and display test (all LEDs on).

Shutdown Mode

When the XL/XD7219 is in shutdown mode, the scan oscillator is halted, all segment current sources are pulled to ground, and all digit drivers are pulled to V+, thereby blanking the display. The XL/XD7221 is identical, except the drivers are high-impedance. Data in the digit and control registers remains unaltered. Shutdown can be used to save power or as an alarm to flash the display by successively entering and leaving shutdown mode. For minimum supply current in shutdown mode, logic inputs should be at ground or V+ (CMOS-logic levels).

Typically, it takes less than 250µs for the XL/XD7219/ XL/XD7221 to leave shutdown mode. The display driver can be programmed while in shutdown mode, and shutdown mode can be overridden by the display-test function.

TABLE 2.REGISTER ADDRESS MAP

REGISTER	ADDRESS					HEX CODE
	D15–D12	D11	D10	D9	D8	
No-Op	X	0	0	0	0	0xX0
Digit 0	X	0	0	0	1	0xX1
Digit 1	X	0	0	1	0	0xX2
Digit 2	X	0	0	1	1	0xX3
Digit 3	X	0	1	0	0	0xX4
Digit 4	X	0	1	0	1	0xX5
Digit 5	X	0	1	1	0	0xX6
Digit 6	X	0	1	1	1	0xX7
Digit 7	X	1	0	0	0	0xX8
Decode Mode	X	1	0	0	1	0xX9
Intensity	X	1	0	1	0	0xXA
Scan Limit	X	1	0	1	1	0xXB
Shutdown	X	1	1	0	0	0xXC
Display Test	X	1	1	1	1	0xXF

Initial Power-Up

On initial power-up, all control registers are reset, the display is blanked, and the XL/XD7219/XL/XD7221 enter shutdown mode. Program the display driver prior to display use. Otherwise, it will initially be set to scan one digit, it will not decode data in the data registers, and the intensity register will be set to its minimum value.

Decode-Mode Register

The decode-mode register sets BCD code B (0-9, E, H, L, P, and -) or no-decode operation for each digit. Each bit in the register corresponds to one digit. A logic high selects code B decoding while logic low bypasses the decoder. Examples of the decode mode control-register format are shown in Table 4.

When the code B decode mode is used, the decoder looks only at the lower nibble of the data in the digit registers (D3–D0), disregarding bits D4–D6. D7, which sets the decimal point (SEG DP), is independent of the decoder and is positive logic (D7 = 1 turns the decimal point on). Table 5 lists the code B font.

When no-decode is selected, data bits D7–D0 correspond to the segment lines of the XL/XD7219/XL/XD7221. Table 6 shows the one-to-one pairing of each data bit to the appropriate segment line.

Table 3. Shutdown Register Format (Address (Hex) = 0xXC)

MODE	ADDRESS CODE (HEX)	REGISTER DATA							
		D7	D6	D5	D4	D3	D2	D1	D0
Shutdown Mode	0xXC	X	X	X	X	X	X	X	X
Normal Operation	0xXC	X	X	X	X	X	X	X	1

Table 4. Decode-Mode Register Examples (Address (Hex) = 0xX9)

DECODE MODE	REGISTER DATA								HEX CODE
	D7	D6	D5	D4	D3	D2	D1	D0	
No decode for digits 7–0	0	0	0	0	0	0	0	0	0x00
Code B decode for digit 0 No decode for digits 7–1	0	0	0	0	0	0	0	1	0x01
Code B decode for digits 3–0 No decode for digits 7–4	0	0	0	0	1	1	1	1	0x0F
Code B decode for digits 7–0	1	1	1	1	1	1	1	1	0xFF

Table 5. Code B Font

7-SEGMENT CHARACTER	REGISTER DATA						ON SEGMENTS = 1							
	D7*	D6–D4	D3	D2	D1	D0	DP*	A	B	C	D	E	F	G
0		X	0	0	0	0		1	1	1	1	1	1	0
1		X	0	0	0	1		0	1	1	0	0	0	0
2		X	0	0	1	0		1	1	0	1	1	0	1
3		X	0	0	1	1		1	1	1	1	0	0	1
4		X	0	1	0	0		0	1	1	0	0	1	1
5		X	0	1	0	1		1	0	1	1	0	1	1
6		X	0	1	1	0		1	0	1	1	1	1	1
7		X	0	1	1	1		1	1	1	0	0	0	0
8		X	1	0	0	0		1	1	1	1	1	1	1
9		X	1	0	0	1		1	1	1	1	0	1	1
—		X	1	0	1	0		0	0	0	0	0	0	1
E		X	1	0	1	1		1	0	0	1	1	1	1
H		X	1	1	0	0		0	1	1	0	1	1	1
L		X	1	1	0	1		0	0	0	1	1	1	0
P		X	1	1	1	0		1	1	0	0	1	1	1
blank		X	1	1	1	1		0	0	0	0	0	0	0

Table 6. No-Decode Mode Data Bits and Corresponding Segment Lines

	REGISTER DATA							
	D7	D6	D5	D4	D3	D2	D1	D0
Corresponding Segment Line	DP	A	B	C	D	E	F	G

Intensity Control and Interdigit Blanking

The XL/XD7219/XL/XD7221 allow display brightness to be controlled with an external resistor (R_{SET}) connected between V+ and ISET. The peak current sourced from the segment drivers is nominally 100 times the current entering ISET. This resistor can either be fixed or variable to allow brightness adjustment from the front panel. Its minimum value should be 9.53kΩ, which typically sets the segment current at 40mA. Display brightness can also be controlled digitally by using the intensity register.

Digital control of display brightness is provided by an internal pulse-width modulator, which is controlled by the lower nibble of the intensity register. The modulator scales the average segment current in 16 steps from a maximum of 31/32 down to 1/32 of the peak current set by R_{SET} (15/16 to 1/16 on XL/XD7221). Table 7 lists the intensity register format. The minimum interdigit blanking time is set to 1/32 of a cycle.

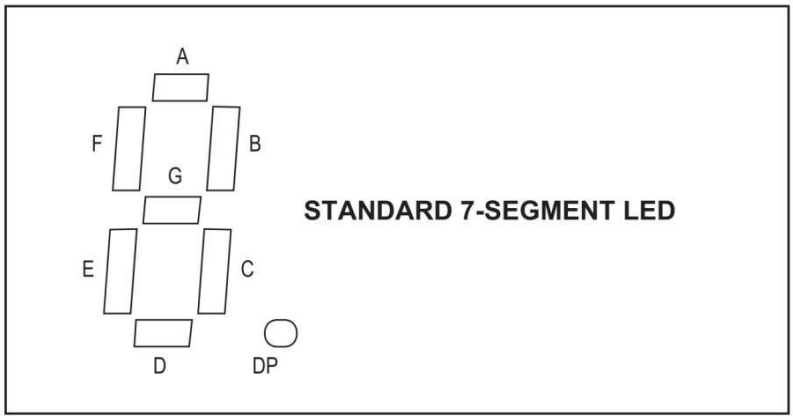

Table 7. Intensity Register Format (Address (Hex) = 0xXA)

DUTY CYCLE		D7	D6	D5	D4	D3	D2	D1	D0	HEX CODE
XL/XD7219	XL/XD7221									
1/32 (min on)	1/16 (min on)	X	X	X	X	0	0	0	0	0xX0
3/32	2/16	X	X	X	X	0	0	0	1	0xX1
5/32	3/16	X	X	X	X	0	0	1	0	0xX2
7/32	4/16	X	X	X	X	0	0	1	1	0xX3
9/32	5/16	X	X	X	X	0	1	0	0	0xX4
11/32	6/16	X	X	X	X	0	1	0	1	0xX5
13/32	7/16	X	X	X	X	0	1	1	0	0xX6
15/32	8/16	X	X	X	X	0	1	1	1	0xX7
17/32	9/16	X	X	X	X	1	0	0	0	0xX8
19/32	10/16	X	X	X	X	1	0	0	1	0xX9
21/32	11/16	X	X	X	X	1	0	1	0	0xXA
23/32	12/16	X	X	X	X	1	0	1	1	0xXB
25/32	13/16	X	X	X	X	1	1	0	0	0xXC
27/32	14/16	X	X	X	X	1	1	0	1	0xXD
29/32	15/16	X	X	X	X	1	1	1	0	0xXE
31/32	15/16 (XL/XD on)	X	X	X	X	1	1	1	1	0xXF

Table 8. Scan-Limit Register Format (Address (Hex) = 0xXB)

SCAN LIMIT	REGISTER DATA								HEX CODE
	D7	D6	D5	D4	D3	D2	D1	D0	
Display digit 0 only*	X	X	X	X	X	0	0	0	0xX0
Display digits 0 & 1*	X	X	X	X	X	0	0	1	0xX1
Display digits 0 1 2*	X	X	X	X	X	0	1	0	0xX2
Display digits 0 1 2 3	X	X	X	X	X	0	1	1	0xX3
Display digits 0 1 2 3 4	X	X	X	X	X	1	0	0	0xX4
Display digits 0 1 2 3 4 5	X	X	X	X	X	1	0	1	0xX5
Display digits 0 1 2 3 4 5 6	X	X	X	X	X	1	1	0	0xX6
Display digits 0 1 2 3 4 5 6 7	X	X	X	X	X	1	1	1	0xX7

Scan-Limit Register

The scan-limit register sets how many digits are displayed, from 1 to 8. They are displayed in a multiplexed manner with a typical display scan rate of 800Hz with 8 digits displayed. If fewer digits are displayed, the scan rate is $8f_{OSC}/N$, where N is the number of digits scanned. Since the number of scanned digits affects the display brightness, the scan-limit register should not be used to blank portions of the display (such as leading zero suppression). Table 8 lists the scan-limit register format.

If the scan-limit register is set for three digits or less, individual digit drivers will dissipate excessive amounts of power. Consequently, the value of the R_{SET} resistor must be adjusted according to the number of digits displayed, to limit individual digit driver power dissipation. Table 9 lists the number of digits displayed and the corresponding maximum recommended segment current when the digit drivers are used.

Display-Test Register

The display-test register operates in two modes: normal and display test. Display-test mode turns all LEDs on by overriding, but not altering, all controls and digit registers (including the shutdown register). In display-test mode, 8 digits are scanned and the duty cycle is 31/32 (15/16 for XL/XD7221). Table 10 lists the display-test register format.

Table 9. XL/XDimum Segment Current for 1-, 2-, or 3-Digit Displays

NUMBER OF DIGITS DISPLAYED	XL/XDIMUM SEGMENT CURRENT (mA)
1	10
2	20
3	30

Table 10. Display-Test Register Format (Address (Hex) = 0xXF)

MODE	REGISTER DATA							
	D7	D6	D5	D4	D3	D2	D1	D0
Normal Operation	X	X	X	X	X	X	X	0
Display Test Mode	X	X	X	X	X	X	X	1

Note: The XL/XD7219/XL/XD7221 remain in display-test mode (all LEDs on) until the display-test register is reconfigured for normal operation.

No-Op Register

The no-op register is used when cascading XL/XD7219s or XL/XD7221s. Connect all devices' LOAD/CS inputs together and connect DOUT to DIN on adjacent devices. DOUT is a CMOS logic-level output that easily drives DIN of successively cascaded parts. (Refer to the *Serial Addressing Modes* section for detailed information on serial input/output timing.) For example, if four XL/XD7219s are cascaded, then to write to the fourth chip, sent the desired 16-bit word, followed by three no-op codes (hex 0xX0XX, see Table 2). When LOAD/CS goes high, data is latched in all devices. The first three chips receive no-op commands, and the fourth receives the intended data.

Applications Information

Supply Bypassing and Wiring

To minimize power-supply ripple due to the peak digit driver currents, connect a 10µF electrolytic and a 0.1µF ceramic capacitor between V+ and GND as close to the device as possible. The XL/XD7219/XL/XD7221 should be placed in close proximity to the LED display, and connections should be kept as short as possible to minimize the effects of wiring inductance and electro-magnetic interference. Also, both GND pins must be connected to ground.

Selecting R_{SET} Resistor and Using External Drivers

The current per segment is approximately 100 times the current in ISET. To select R_{SET}, see Table 11. The XL/XD7219/XL/XD7221's XL/XDimum recommended segment current is 40mA. For segment current levels above these levels, external digit drivers will be needed. In this application, the XL/XD7219/XL/XD7221 serve only as controllers for other high-current drivers or transistors. Therefore, to conserve power, use R_{SET} = 47kΩ when using external current sources as segment drivers.

The example in Figure 2 uses the XL/XD7219/XL/XD7221's segment drivers, a XL/XD394 single-pole double-throw analog switch, and external transistors to drive 2.3" AND2307SLC common-cathode displays. The 5.6V zener diode has been added in series with the decimal point LED because the decimal point LED forward voltage is typically 4.2V. For all other segments the LED forward voltage is typically 8V. Since external transistors are used to sink current (DIG 0 and DIG 1 are used as logic switches), peak segment currents of 45mA are allowed even though only two digits are displayed. In applications where the XL/XD7219/XL/XD7221's digit drivers are used to sink current and fewer than four digits are displayed, Table 9 specifies the maximum allowable segment current. R_{SET} must be selected accordingly (Table 11).

Refer to the *Continuous Power Dissipation* section of the *Absolute maximum Ratings* to calculate acceptable limits for ambient temperature, segment current, and the LED forward-voltage drop.

Table 11. R_{SET} vs. Segment Current and LED Forward Voltage

I_{SEG} (mA)	V_{LED} (V)				
	1.5	2.0	2.5	3.0	3.5
40	12.2	11.8	11.0	10.6	9.69
30	17.8	17.1	15.8	15.0	14.0
20	29.8	28.0	25.9	24.5	22.6
10	66.7	63.7	59.3	55.4	51.2

Note: *R_{SET} values are in Kilo Ohms (kΩ)*

Computing Power Dissipation

The upper limit for power dissipation (PD) for the XL/XD7219/XL/XD7221 is determined from the following equation:

$$PD = (V+ \times 8mA) + (V+ - V_{LED})(DUTY \times I_{SEG} \times N)$$

where:

V+ = supply voltage

DUTY = duty cycle set by intensity register

N = number of segments driven (worst case is 8) V_{LED} = LED forward voltage

I_{SEG} = segment current set by R_{SET}

Dissipation example:

I_{SEG} = 40mA, N = 8, DUTY = 31/32, V_{LED} = 1.8V at 40mA, V+ = 5.25V

PD = (5.25V x 8mA) + (5.25V - 1.8V)(31/32 x 40mA x 8) = 1.11W

Thus, for a CERDIP package (θ_{JA} = +80°C/W from Table 12), the XL/XDimum allowed ambient temperature T_A is given by:

$$T_{J(XL/XD)} = T_A + PD \times \theta_{JA}\ 150°C = T_A + 1.11W \times 80°C/W$$

where T_A = +61.2°C.

The T_A limits for PDIP and SO packages in the dissipation example above are +66.7°C and +55.6°C, respectively.

Table 12. Package Thermal Resistance Data

PACKAGE	THERMAL RESISTANCE (θ_{JA})
24 Narrow DIP	+75°C/W
24 Wide SO	+85°C/W
24 CERDIP	+80°C/W
XL/XDimum Junction Temperature (T_J) = +150°C	
XL/XDimum Ambient Temperature (T_A) = +85°C	

Cascading Drivers

The example in Figure 3 drives 16 digits using a 3-wire µP interface. If the number of digits is not a multiple of 8, set both drivers' scan limits registers to the same number so one display will not appear brighter than the other. For example, if 12 digits are need, use 6 digits per display with both scan-limit registers set for 6 digits so that both displays have a 1/6 duty cycle per digit. If 11 digits are needed, set both scan-limit registers for 6 digits and leave one digit driver unconnected. If one display for 6 digits and the other for 5 digits, the second display will appear brighter because its duty cycle per digit will be 1/5 while the first display's will be 1/6. Refer to the *No-Op Register* section for additional information.

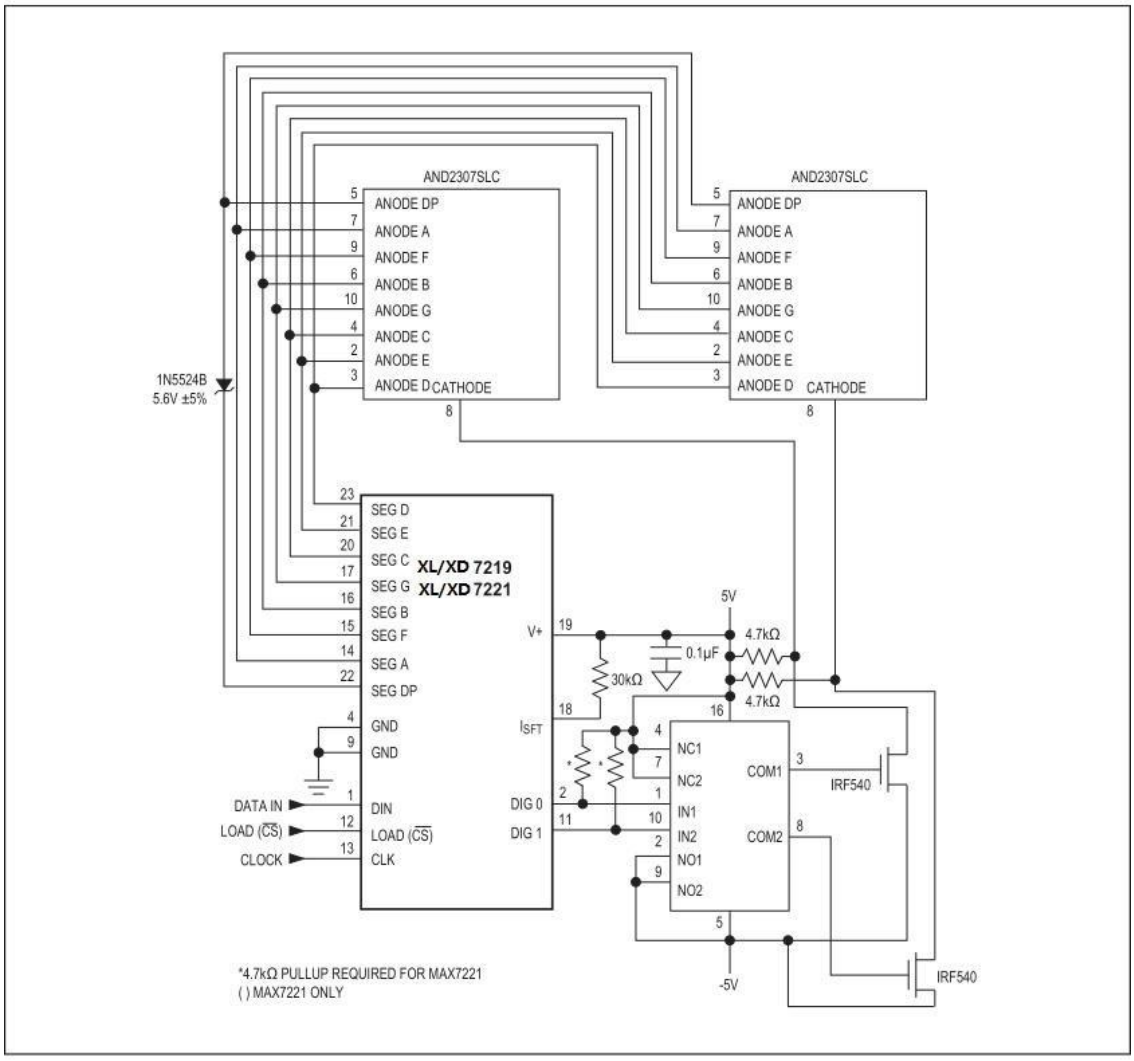

Figure 2. XL/XD 7219/ XL/XD 7221 Driving 2.3in Displays

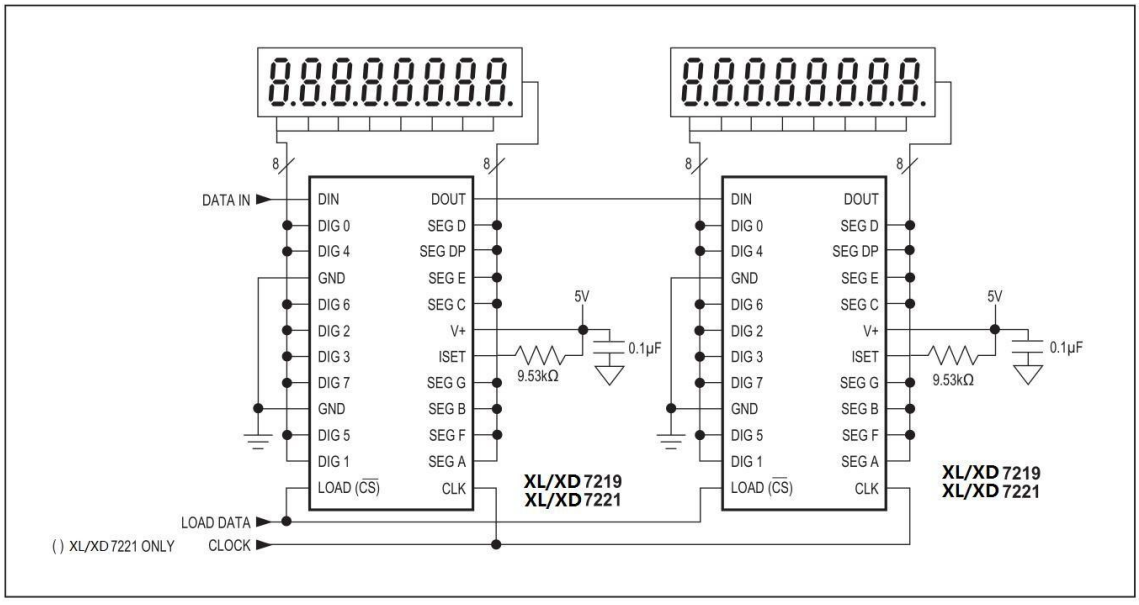

Figure 3. Cascading XL/XD 7219/ XL/XD 7221s to Drive 16 Seven-Segment LED Digits

12. ORDERING INFORMATION

Ordering Information

Part Number	Device Marking	Package Type	Body size (mm)	Temperature (°C)	MSL	Transport Media	Package Quantity
XL7219	XL7219	SOP24	15.34* 7.52	-40 to +85	MSL3	T&R	1000
XD7219	XD7219	DIP24	31.75 * 6.55	-40 to +85	MSL3	Tube 25	600
XL7221	XL7221	SOP24	15.34* 7.52	-40 to +85	MSL3	T&R	1000
XD7221	XD7221	DIP24	31.75 * 6.55	-40 to +85	MSL3	Tube 25	600

13. DIMENSIONAL DRAWINGS

DIP24

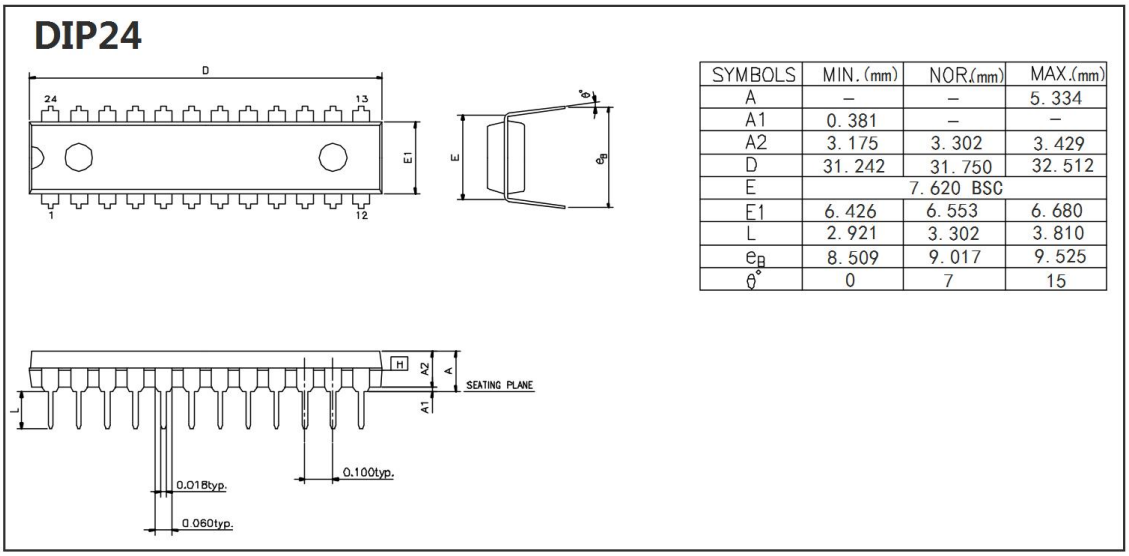

SYMBOLS	MIN.(mm)	NOR(mm)	MAX.(mm)
A	–	–	5.334
A1	0.381	–	–
A2	3.175	3.302	3.429
D	31.242	31.750	32.512
E		7.620 BSC	
E1	6.426	6.553	6.680
L	2.921	3.302	3.810
e_B	8.509	9.017	9.525
θ°	0	7	15

SOP24

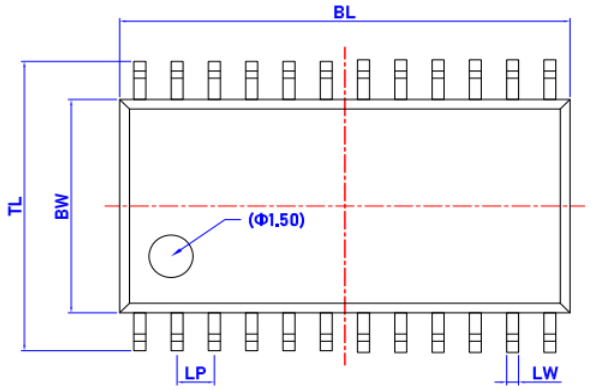

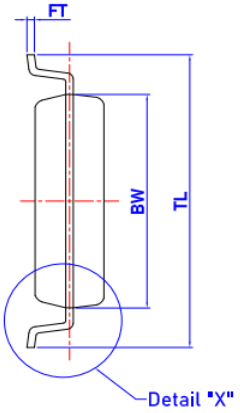

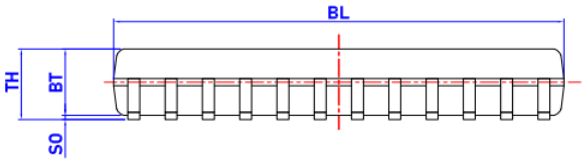

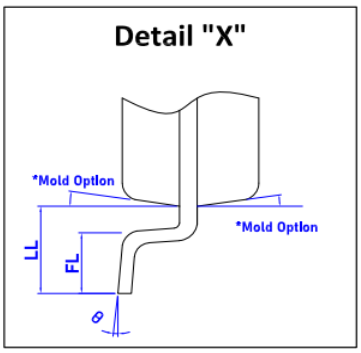

Item	BL	BW	TL	LW	LP	FT	BT	SO	TH	LL	FL	θ
表示	总长	胶体宽度	跨度	脚宽	脚间距	脚厚	胶体厚度	站高	胶体高度	单边长	脚长	脚角度
Unit	mm	mm	mm	mm	mm	mm	mm	mm	mm	mm	mm	°
Spec	15.63 (15.34) 15.05	7.62 (7.52) 7.42	10.60 (10.20) 9.80	0.406 TYP	1.270 TYP	0.300 (0.250) 0.200	2.44 (2.34) 2.24	0.300 (0.150) 0.100	2.640 Max.	1.50 (1.40) 1.30	0.90 (0.80) 0.70	8 (4) 0