UMW IRLML5103TR

-30V P-Channel MOSFET

1.Description

The IRLML5103TR uses advanced trench technology to provide excellent $R_{DS(on)}$ with low gate charge. This device is suitable for use as a load switch or in PWM applications.

2.1Features

- $V_{DS\ (V)}$=-30V
- $R_{DS(ON)}$<300mΩ(V_{GS}=-10V)
- $R_{DS(ON)}$<500mΩ(V_{GS}=-4.5V)

2.2Features

- Generation VTechnology
- UltraLowOn-Resistance
- P-Channel MOSFET
- RoHS CompliantHalogen-Free
- Low Profile(<1.1mm)
- Available in Tape and Reel
- Fast Switching
- Lead-Free

4.Pinning information

Pin	Symbol	Description
1	G	GATE
2	S	SOURCE
3	D	DRAIN

SOT-23

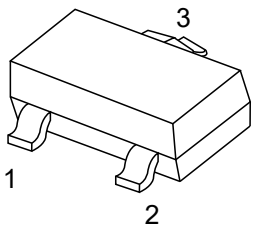

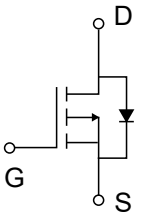

5.Maximum ratings (T_A=25°C unless otherwise noted)

Parameter		Symbol	Value	Units
Continuous Drain Current, V_{GS} @ -10V	T_A=25°C	I_D	-0.76	A
Continuous Drain Current, V_{GS} @ -10V	T_A=70°C		-0.61	
Pulsed Drain Current ①		I_{DM}	-4.8	
Power Dissipation	T_A=25°C	P_D	540	mW
Linear Derating Factor			4.3	mW/°C
Gate-to-Source Voltage		V_{GS}	±20	V
Peak diode Recovery dv/dt ②		dv/dt	-5	V/ns
Junction and Storage Temperature Range		T_J,T_{STG}	-55 to 150	°C

6.Thermal Resistance Rating

Parameter	Symbol	Typ	Max	Units
Maximum Junction-to-Ambien ④	$R_{\theta JA}$		230	°C/W

7.Electrical Characteristics T_J=25°C

Parameter	Symbol	Conditions	Min	Typ	Max	Units
Drain-Source Breakdown Voltage	$V_{(BR)DSS}$	I_D=-250μA, V_{GS}=0V	-30			V
Breakdown Voltage Temp. Coefficient	$\Delta V_{(BR)DSS}/\Delta T_J$	I_D=-1mA, Reference to 25°C		0.029		V/°C
Static Drain-to-Source On-Resistance	$R_{DS(ON)}$	V_{GS}=-10V, I_D=-0.6A ③			300	mΩ
		V_{GS}=-4.5V, I_D=-0.3A ③			500	
Gate Threshold Voltage	$V_{GS(th)}$	V_{DS}=V_{GS}, I_D=-250μA	-1			V
Forward Transconductance	g_{fs}	V_{DS}=-10V, I_D=-0.3A	0.44			S
Drain-to-Source Leakage Current	I_{DSS}	V_{DS}=-24V,V_{GS}=0V			-1	μA
		V_{DS}=-24V,V_{GS}=0V,T_J=125°C			-25	
Gate-to-Source Forward Leakage	I_{GSS}	V_{GS}=-20V			-100	nA
Gate-to-Source Reverse Leakage		V_{GS}=20V			100	
Total Gate Charge	Q_g	I_D=-0.6A		3.4	5.1	nC
Gate-to-Source Charge	Q_{gs}	V_{DS}=-24V		0.52	0.78	
Gate-to-Drain ("Miller") Charge	Q_{gd}	V_{GS}=-10V,See Fig.6 and 9 ③		1.1	1.7	
Turn-On Delay Time	$t_{D(on)}$	V_{DD}=-15V		10		ns
Rise Time	t_r	I_D=-0.6A		8.2		
Turn-Off Delay Time	$t_{D(off)}$	R_G=6.2Ω		23		
Fall Time	t_f	R_D=25Ω, See Fig.10 ③		16		
Input Capacitance	C_{iss}	V_{GS}=0V		75		pF
Output Capacitance	C_{oss}	V_{DS}=-25V		37		
Reverse Transfer Capacitance	C_{rss}	f=1MHz, See Fig.5		18		

Source-Drain Ratings and Characteristics						
Continuous Source Current (Body Diode)	I_S	MOSFET symbol showing the integral reverse p-n junction diode.			-0.54	A
Pulsed Source Current (Body Diode) ①	I_{SM}				-4.8	
Diode Forward Voltage	V_{SD}	T_J=25°C,I_S=-0.6A,V_{GS}=0V ③			-1.2	V
Reverse Recovery Time	t_{rr}	T_J=25°C, I_F=-0.6A		26	39	ns
Reverse Recovery Charge	Q_{rr}	dI/dt=100A/μs ③		20	30	nC

Notes:

① Repetitive rating; pulse width limited bymax.junction temperature.(See fig.11)

② I_{SD}≤ -0.6A, di/dt ≤ 110A/μS, V_{DD} ≤ $V_{(BR)DSS}$,T_J≤ 150°C

③ Pulse width ≤ 300us; duty cycle ≤ 2%.

④ Surface mounted on FR-4 board, t≤ 5sec.

8.1Typical Characterisitics

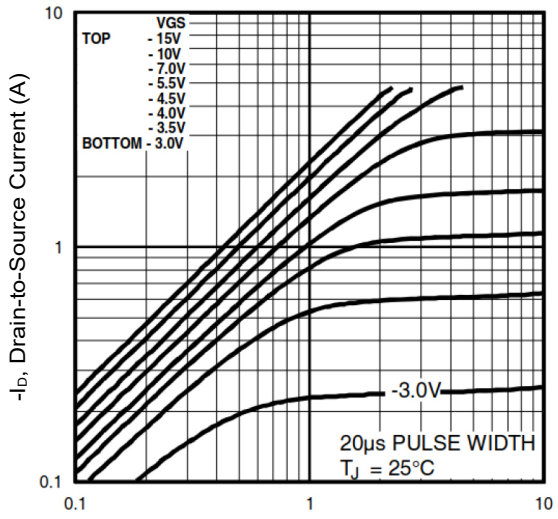

Fig 1. Typical Output Characteristics

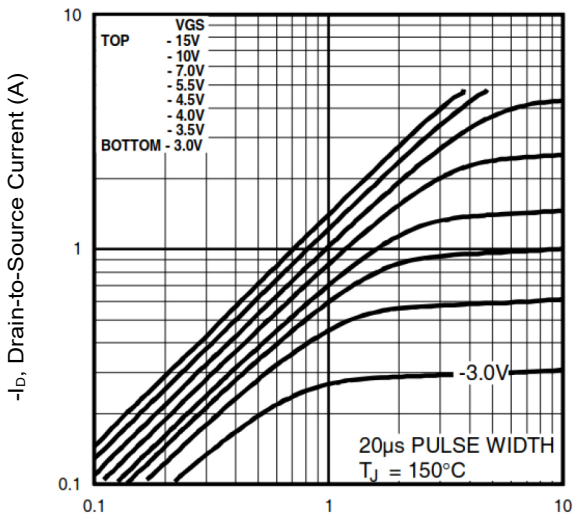

Fig 2. Typical Output Characteristics

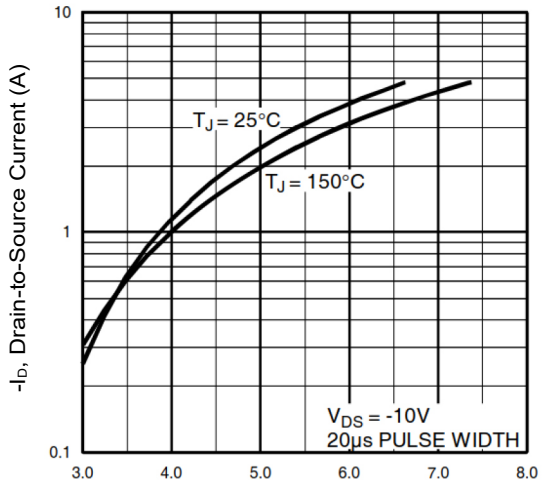

Fig 3. Typical Transfer Characteristics

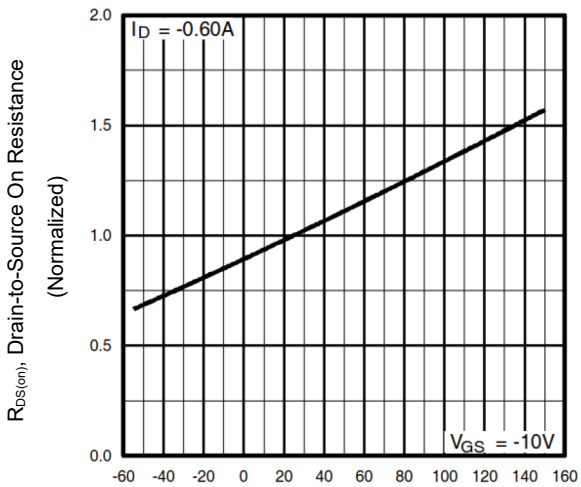

Fig 4. Nomalized On-ResistanceVs. Temperature

8.2Typical Characterisitics

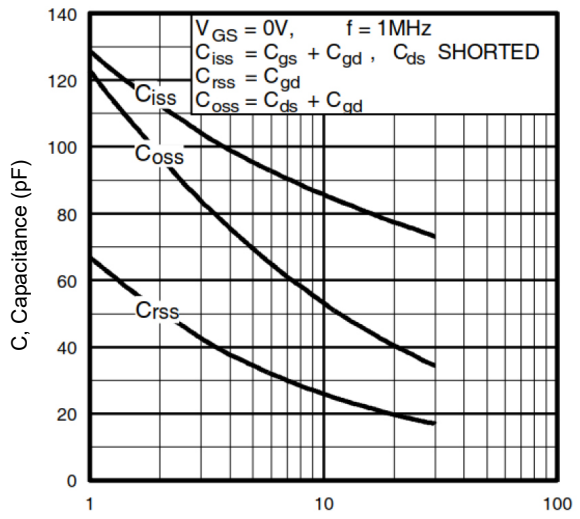

-V_{DS} ,Drain-to-Source Voltage (V)

Fig 5. Typical Capacitance Vs. Drain-to-Source Voltage

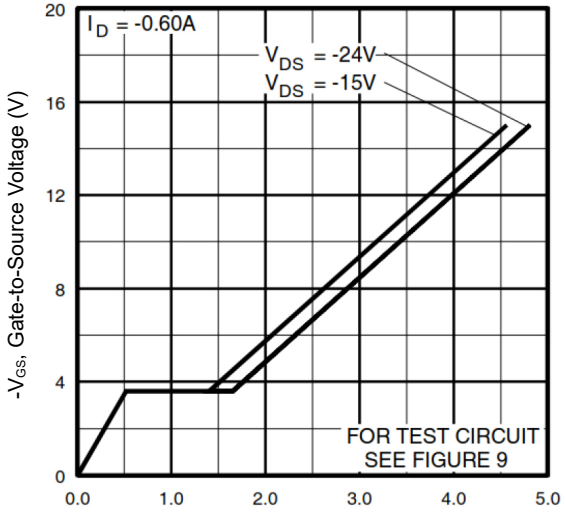

Q_G, Total Gate Charge (nC)

Fig 6. Typical Gate Charge Vs. Gate-to-Source Voltage

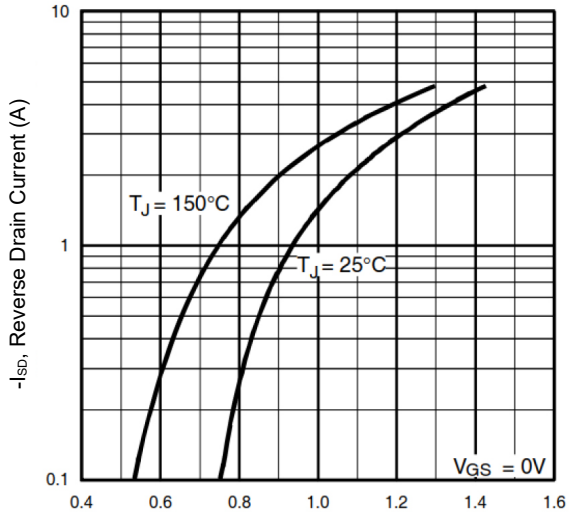

-V_{SD}, Source-to-Drain Voltage (V)

Fig 7. Typical Source-Drain Diode Forward Voltage

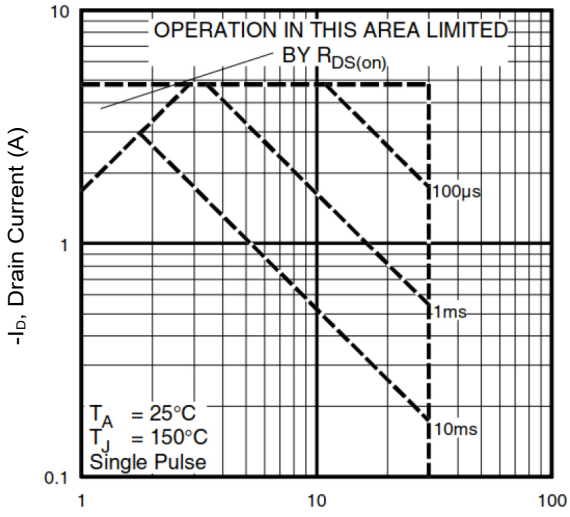

-V_{DS}, Drain-to-Source Voltage (V)

Fig 8. Maximum Safe Operating Area

8.3Typical Characterisitics

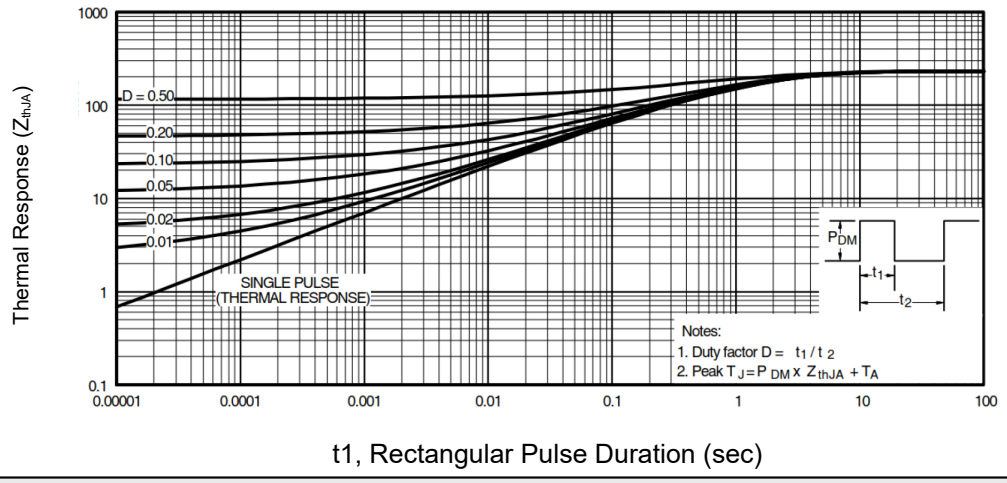

Figure 9. Maximum Effective Transient Themal Impedance, Junction-to-Ambient

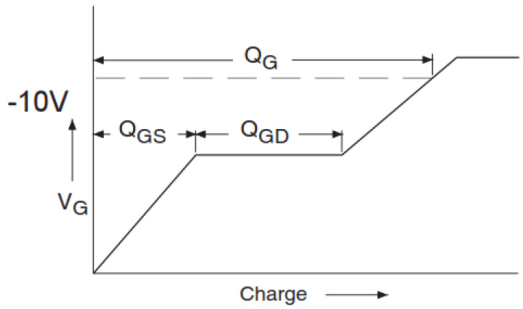

Fig 10a. Basic Gate Charge Wavefomm

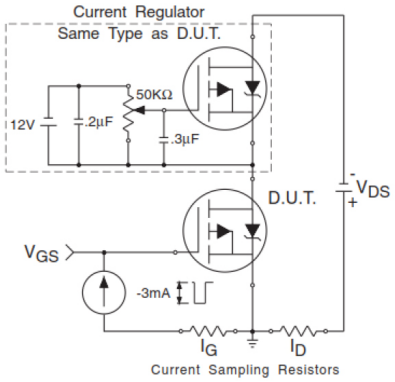

Fig 10a. Switching Time Test Circuit

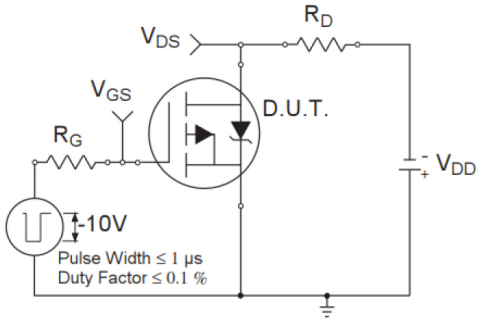

Fig 11a. Gate Charge Test Circuit

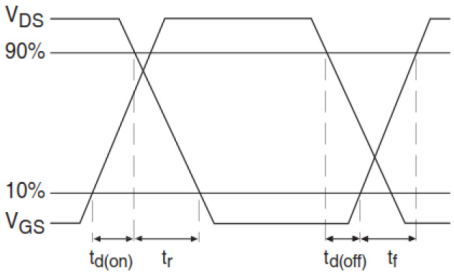

Fig 11b. Switching Time Wavefomms

9.SOT-23 Package Outline Dimensions

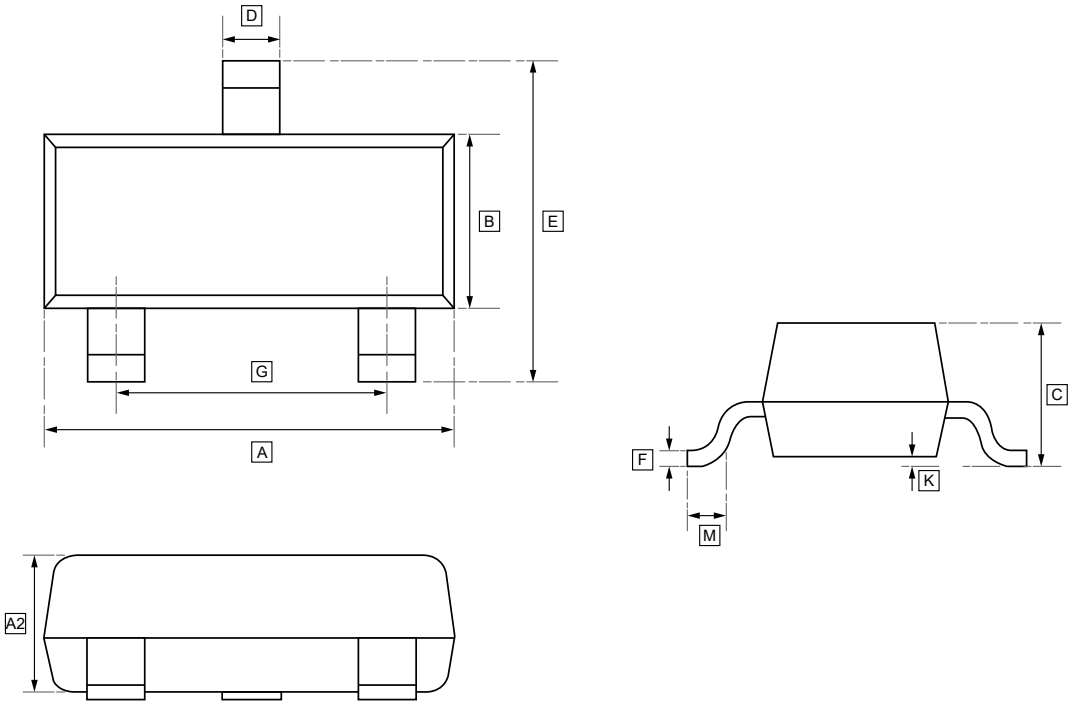

DIMENSIONS (mm are the original dimensions)

Symbol	A	B	C	D	E	G	K	M	A2	F
Min	2.80	1.20	0.90	0.32	2.25	1.80	0.00	0.30	0.95	0.095
Max	3.04	1.40	1.10	0.55	2.55	2.00	0.10	-	1.05	0.115

10.Ordering information

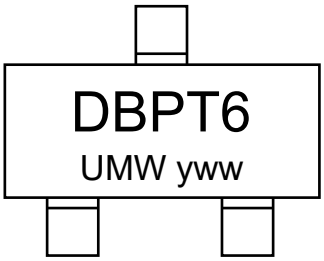

yww: Batch Code

Order Code	Package	Base QTY	Delivery Mode
UMW IRLML5103TR	SOT-23	3000	Tape and reel

11.Disclaimer

UMW reserves the right to make changes to all products, specifications. Customers should obtain the latest version of product documentation and verify the completeness and currency of the information before placing an order.

When applying our products, please do not exceed the maximum rated values, as this may affect the reliability of the entire system. Under certain conditions, any semiconductor product may experience faults or failures. Buyers are responsible for adhering to safety standards and implementing safety measures during system design, prototyping, and manufacturing when using our products to prevent potential failure risks that could lead to personal injury or property damage.

Unless explicitly stated in writing, UMW products are not intended for use in medical, life-saving, or life-sustaining applications, nor for any other applications where product failure could result in personal injury or death. If customers use or sell the product for such applications without explicit authorization, they assume all associated risks.

When reselling, applying, or exporting, please comply with export control laws and regulations of China, the United States, the United Kingdom, the European Union, and other relevant countries, regions, and international organizations.

This document and any actions by UMW do not grant any intellectual property rights, whether express or implied, by estoppel or otherwise. The product names and marks mentioned herein may be trademarks of their respective owners.