REVISIONS					
REV.	ECN NO.	LOCATION	DESCRIPTION	DATE	DESIGN
A0	N/A		INITIAL RELEASE	2026.06.02	山楂

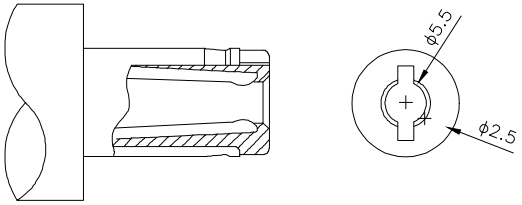

DC MATE PLUG

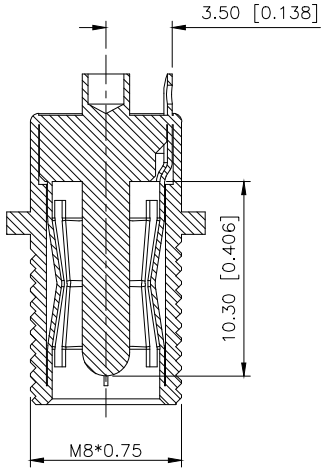

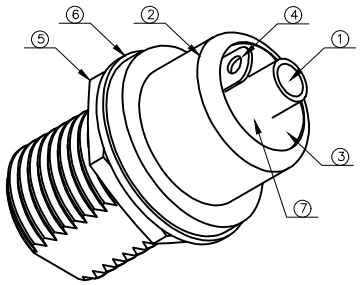

规格 Specifications:
额定电压 Voltage rating:24VAC/DC。
额定电流 Current rating:8A AC/DC
绝缘电阻 Insulation resistance:≥100MΩ Min
接触电阻 Contact resistance:≤50mΩ Max
耐电压 Withstanding voltage:500V AC/minute
寿命 DURABILITY: 5000 CYCLES MIN
拔出力 CONNECTOR MATING FORCES: 3N MIN
插入力 CONNECTOR UNMATING FORCES: 35N MAX
温度区间 Temperature range:−55℃to+105℃
防水等级 WATERPROOF LEVEL: IP65

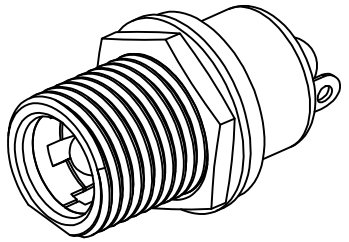

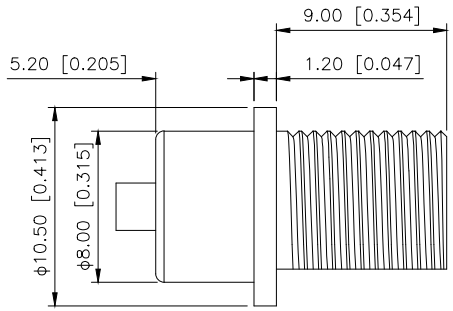

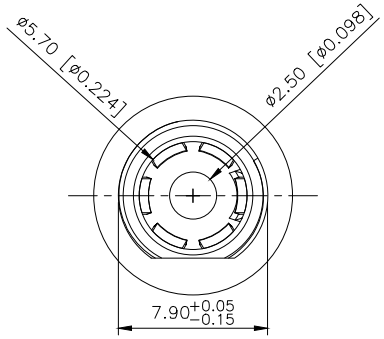

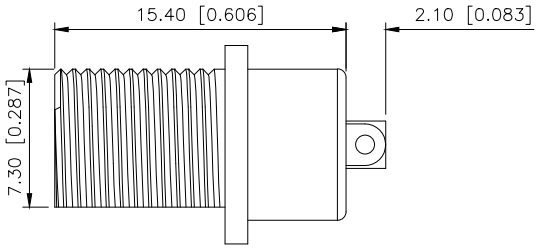

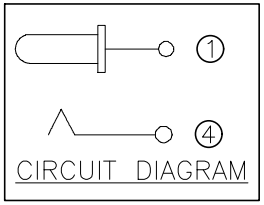

CIRCUIT DIAGRAM

垫片

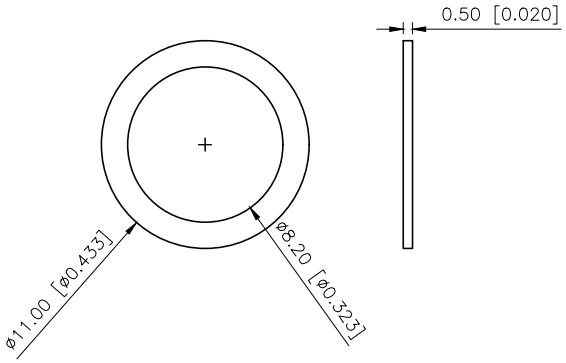

螺帽

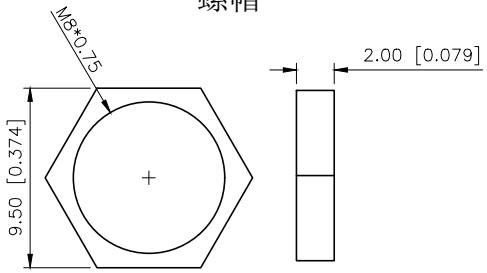

面板开孔参考尺寸

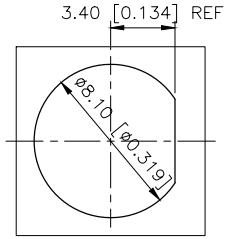

NO	NAME	QTY	MATERIAL	PLATING
⑦	Glue	1		Black
⑥	Gasket	1	SPCC	Nickel plating
⑤	Nut	1	C3604	Nickel plating
④	Shrapnel	1	C5191	Nickel plating
③	Insulating plastic	1	PBT	Black
②	copper bush	1	C3604	Nickel plating
①	PIN	1	C3604	Nickel plating

ANGLAR	±5°
X.	±0.40
X.x	±0.30
X.xx	±0.20
X.xxx	±0.15
UNSPECIFIED TOLERANCES	

XKB

DESIGN	山楂	VIEW:	MODEL TYPE: DC JACK
CHECKED		UNIT: mm/in	PART NO.: DC-008-8A-2.5
APPROVED		SIZE: A4	DWG NO.:

XKB INDUSTRIAL PRECISION CO.,LIMITED

SCALE	PAGE	REVISION
N/A	1/1	A0