UMW ESD7361HT1G

1.Features

The ESD7361 Series ESD protection diodes are designed to protect high speed data lines from ESD.Ultra−low capacitance make this device an ideal solution for protecting voltage sensitive high speed data lines.

2.Features

- Low Capacitance (0.55 pF Max, I/O to GND)
- Protection for the Following IEC Standards:
  IEC61000−4−2 (ESD): Level 4 ±15 kV Contact
  IEC61000−4−4 (EFT): 40 A −5/50 ns
  IEC61000−4−5 (Lightning): 1 A (8/20 μs)
- ISO 10605 (ESD) 330 pF/2 kΩ ±15 kV Contact

3.Pinning information

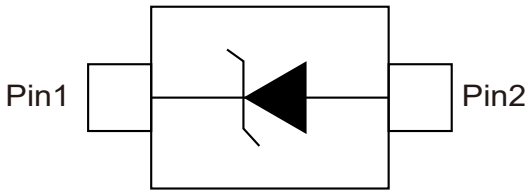

SOD-323

4.Absolute Maximum Ratings T_J= 25°C

Parameter	Symbol	Value	Units
Junction Temperature Range	T_J	-55 to 125	°C
Storage Temperature Range	T_{STG}	-55 to 150	°C
Lead Solder Temperature − Maximum (10 Seconds)	T_L	260	°C
IEC 61000−4−2 Contact (ESD)	ESD	±15	kV
IEC 61000−4−2 Air (ESD)	ESD	±15	kV
ISO 10605 330 pF/2 kΩ Contact (ESD)	ESD	±15	kV

5.Electrical Characteristic (T_A=25°C unless otherwise noted)

Parameter	Symbol	Conditions	Min	Typ	Max	Units
Reverse Working Voltage	V_{RWM}			5	16	V
Breakdown Voltage	V_{BR}	I_T=1mA, pin 1 to pin 2	16.5			V
Reverse Leakage Current	I_R	V_{RWM}=5V		<1	1000	nA
	V_C	V_{RWM}=15V		20	1000	nA
Clamping Voltage (Note 2)	V_C	I_{PP}=8A		31		V
Clamping Voltage (Note 2)	C_J	I_{PP}=16A		34		V
Junction Capacitance	R_{DYN}	V_R=0V, f=1MHz, V_R=0V, f<1GHz			0.55	pF
Dynamic Resistance		TLP Pulse		0.735		Ω
Insertion Loss		f=1MHz		0.01		dB
		f=5GHz		2		dB

Notes:

Product parametric performance is indicated in the Electrical Characteristics for the listed test conditions, unless otherwise noted. Product performance may not be indicated by the Electrical Characteristics if operated under different conditions.

1. For test procedure see Figures 9 and 10.

2. ANSI/ESD STM5.5.1 − Electrostatic Discharge Sensitivity Testing using Transmission Line Pulse (TLP) Model.

TLP conditions: Z_0=50 Ω, t_p=100ns, t_r=4 ns, averaging window; t_1=30 ns to t_2=60ns.

6.Electrical Parameters (T_A=25°C unless otherwise noted)

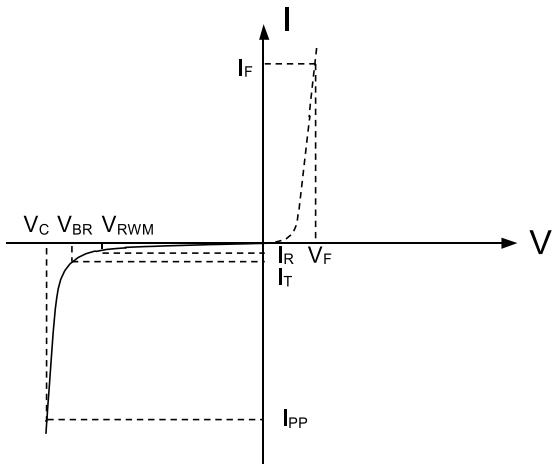

Symbol	Parameter
I_{PP}	Maximum Reverse Peak Pulse Current
V_C	Clamping Voltage @ I_{PP}
V_{RWM}	Working Peak Reverse Voltage
I_R	Maximum Reverse Leakage Current @ V_{RWM}
V_{BR}	Breakdown Voltage @ I_T
I_T	Test Current

7.1Typical characteristic

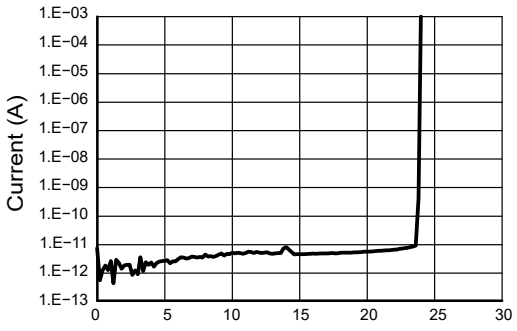

Figure 1: Typical IV Characteristics

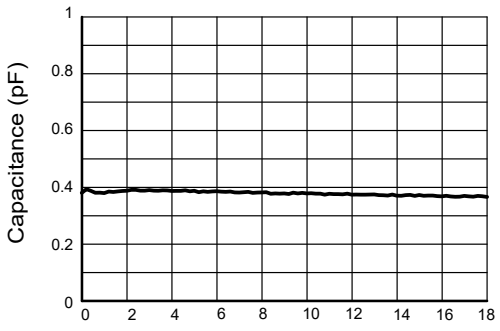

Figure 2: CV Characteristics

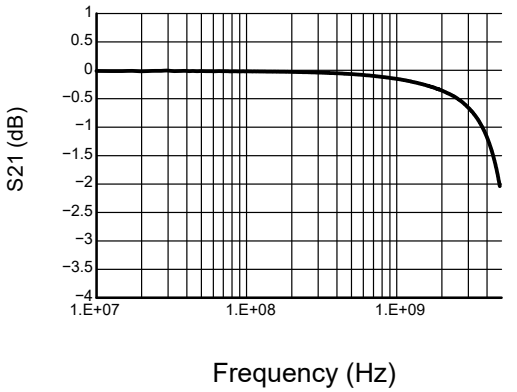

Figure 3: Typical Insertion Loss
ESD7361HT1G (SOD323)

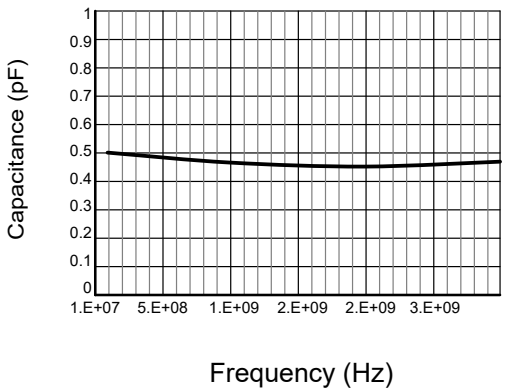

Figure 4: Typical Capacitance Over Frequency
ESD7361HT1G (SOD323)

7.2Typical characteristic

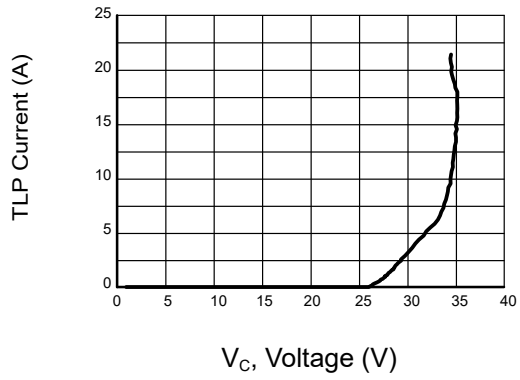

Figure 5: Positive TLP I−V Curve

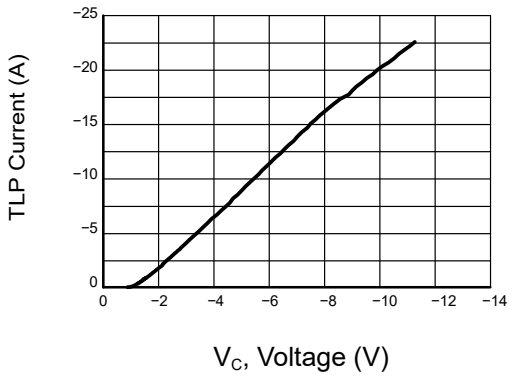

Figure 6: Negative TLP I−V Curve

Notes:

TLP parameter: Z_0=50Ω, t_p=100 ns, t_r=300ps, averaging window: t_1=30 ns to t_2=60 ns. V_{IEC} is the equivalent voltage stress level calculated at the secondary peak of the IEC 61000−4−2 waveform at t=30ns with 2 A/kV.

Level	Test Voltage (kV)	First Peak Current (A)	Current at 30 ns (A)	Current at 60 ns (A)
1	2	7.5	4	2
2	4	15	8	4
3	6	22.5	12	6
4	8	30	16	8

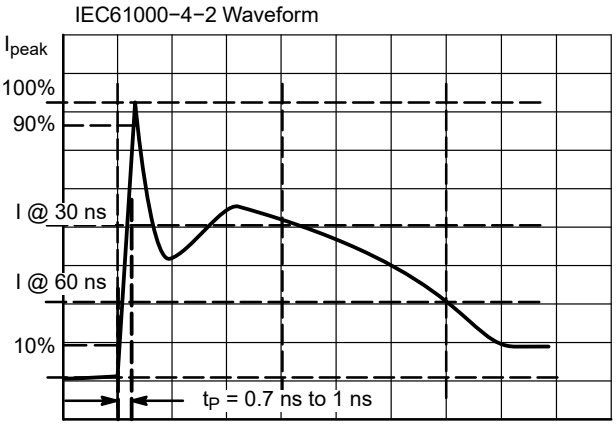

Figure 7: IEC61000−4−2 Spec

7.3Typical characteristic

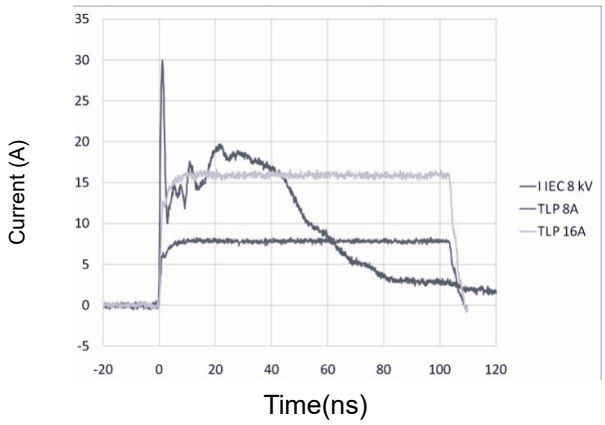

Figure 8: Comparison Between 8 kV IEC 61000-4-2 and 8 A and 16 A TLP Waveforms

Transmission Line Pulse (TLP) Measurement

Transmission Line Pulse (TLP) provides current versus voltage (I−V) curves in which each data point is obtained from a 100 ns long rectangular pulse from a charged transmission line. A simplified schematic of a typical TLP system is shown in Figure 13. TLP I−V curves of ESD protection devices accurately demonstrate the product's ESD capability because the 10s of amps current levels and under 100 ns time scale match those of an ESD event. This is illustrated in Figure 14 where an 8 kV IEC 61000−4−2 current waveform is compared with TLP current pulses at 8 A and 16 A. A TLP I−V curve shows the voltage at which the device turns on as well as how well the device clamps voltage over a range of current levels.

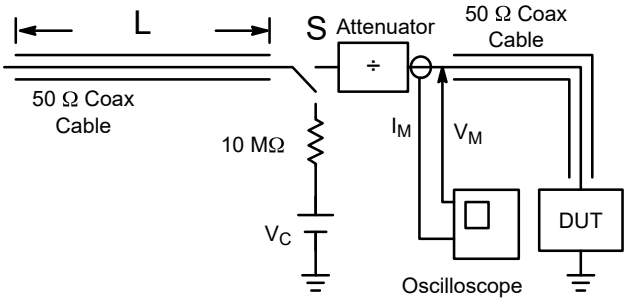

Figure 9: Simplified Schematic of a Typical TLP System

8.SOD-323 Package Outline Dimensions

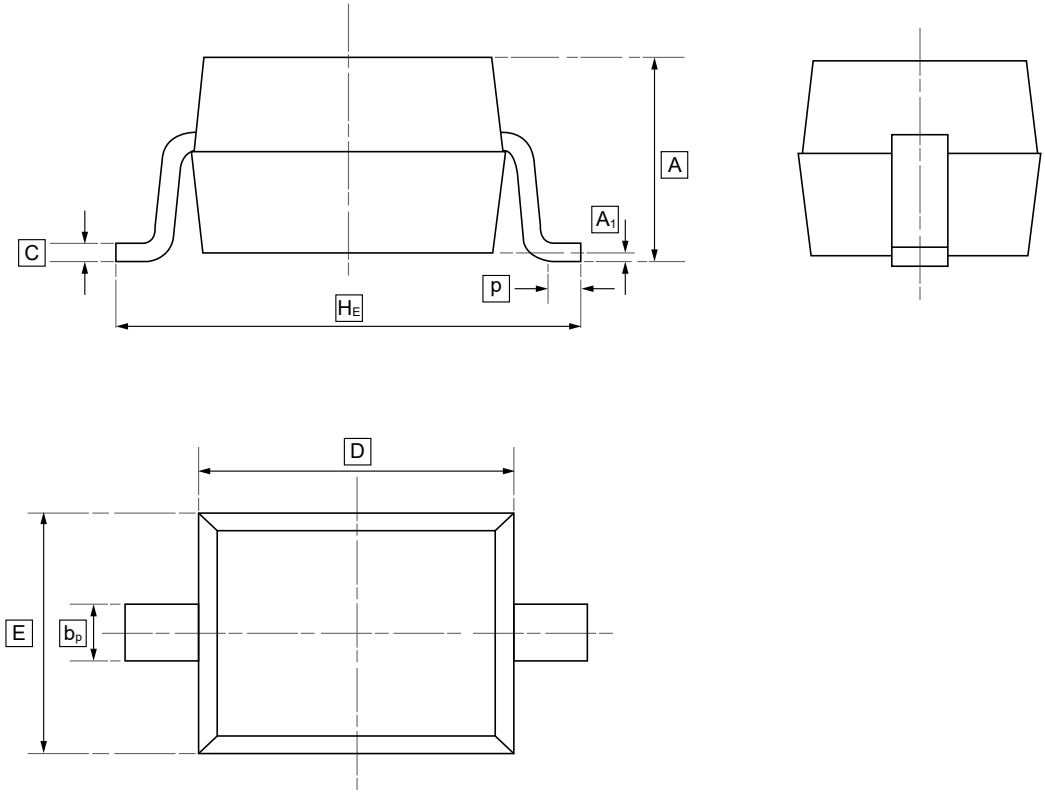

DIMENSIONS (mm are the original dimensions)

Symbol	A	b_p	C	D	E	H_E	A_1	p
Min	0.80	0.25	0.10	1.50	1.15	2.30	0.01	0.20
Max	1.20	0.40	0.15	1.80	1.35	2.80	0.10	0.50

9.Ordering information



ww: Batch Code

Order Code	Package	Base QTY	Delivery Mode
UMW ESD7361HT1G	SOD-323	3000	Tape and reel

10.Disclaimer

UMW reserves the right to make changes to all products, specifications. Customers should obtain the latest version of product documentation and verify the completeness and currency of the information before placing an order.

When applying our products, please do not exceed the maximum rated values, as this may affect the reliability of the entire system. Under certain conditions, any semiconductor product may experience faults or failures. Buyers are responsible for adhering to safety standards and implementing safety measures during system design, prototyping, and manufacturing when using our products to prevent potential failure risks that could lead to personal injury or property damage.

Unless explicitly stated in writing, UMW products are not intended for use in medical, life-saving, or life-sustaining applications, nor for any other applications where product failure could result in personal injury or death. If customers use or sell the product for such applications without explicit authorization, they assume all associated risks.

When reselling, applying, or exporting, please comply with export control laws and regulations of China, the United States, the United Kingdom, the European Union, and other relevant countries, regions, and international organizations.

This document and any actions by UMW do not grant any intellectual property rights, whether express or implied, by estoppel or otherwise. The product names and marks mentioned herein may be trademarks of their respective owners.