TP1SMA5913BT3G

Silicon Planar Zener Diodes

WWW.TECHPUBLIC.COM

FEATURES

- Total power dissipation: Max. 1.5 W.
- Wide zener reverse voltage range 3.6V to 200V.
- Small plastic package suitable for surface mounted design.

PINNING

PIN	DESCRIPTION
1	Cathode
2	Anode

MECHANICAL DATA

- Case: SMA
- Terminals: Solderable per MIL-STD-750, Method 2026
- Approx. Weight: 0.055g / 0.002oz

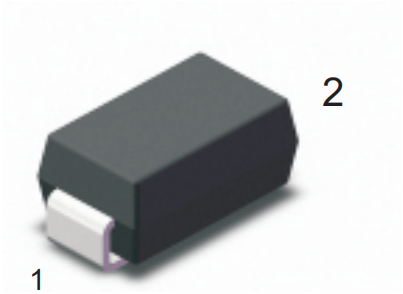

Top View

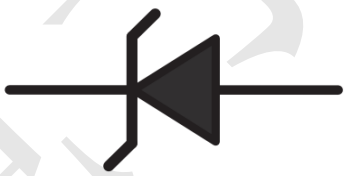

Simplified outline SMA and symbol

Absolute Maximum Ratings And Characteristics Ta = (25°C)

Parameter	Symbol	Value	Unit
Power Dissipation at T_A=25°C	P_D	1.5	W
Forward Voltage at I_F= 200 mA	V_F	1.5	V
Junction Temperature Range	T_J	- 55 ~ + 150	°C
Storage Temperature Range	T_S	- 55 to + 150	°C
Typical Thermal Resistance (1)	$R_{\theta JA}$ $R_{\theta JC}$ $R_{\theta JL}$	100 20 25	°C/W

(1) P.C.B. mounted with 0.2" X 0.2" (5 X 5 mm) copper pad areas.

ELECTRICAL CHARACTERISTICS

Rating at =25 °C ambient temperature unless otherwise specified

TYPE	Nominal Zener Voltage		Maximum Zener Impedance			Maximum Reverse Leakage Current		Maximum DC Zener Current
	V_Z @ I_{ZT}	I_{ZT}	Z_{ZT} @ I_{ZT}	Z_{ZK} @ I_{ZK}	I_{ZK}	I_R @ V_R		I_{ZM}
	(V)	(mA)	(Ω)	(Ω)	(mA)	(μA)	(V)	(mA)
TP1SMA5913BT3G	3.3	113.6	10	500	1.0	100	1.0	454

Fig.1 Maximum Continuous Power Derating

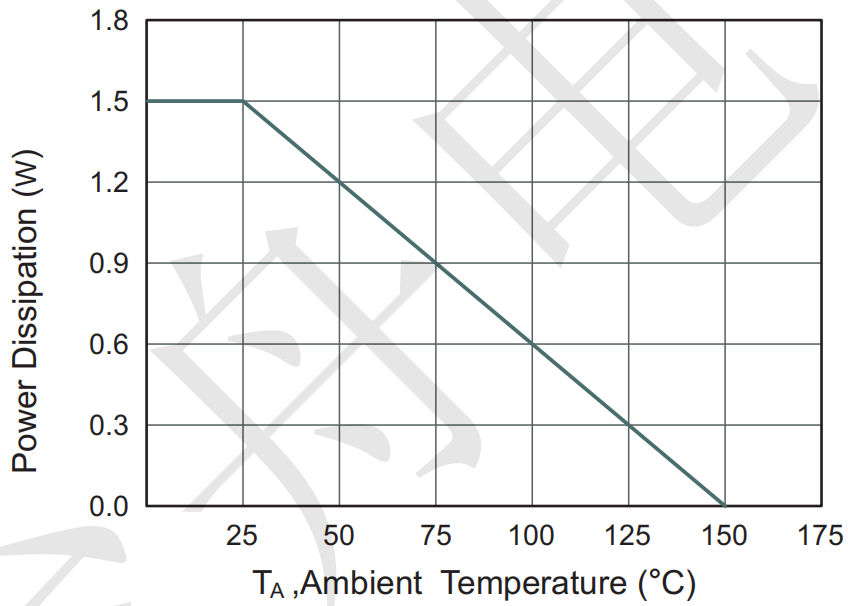

Package Outline Dimensions (unit:mm)

SMA

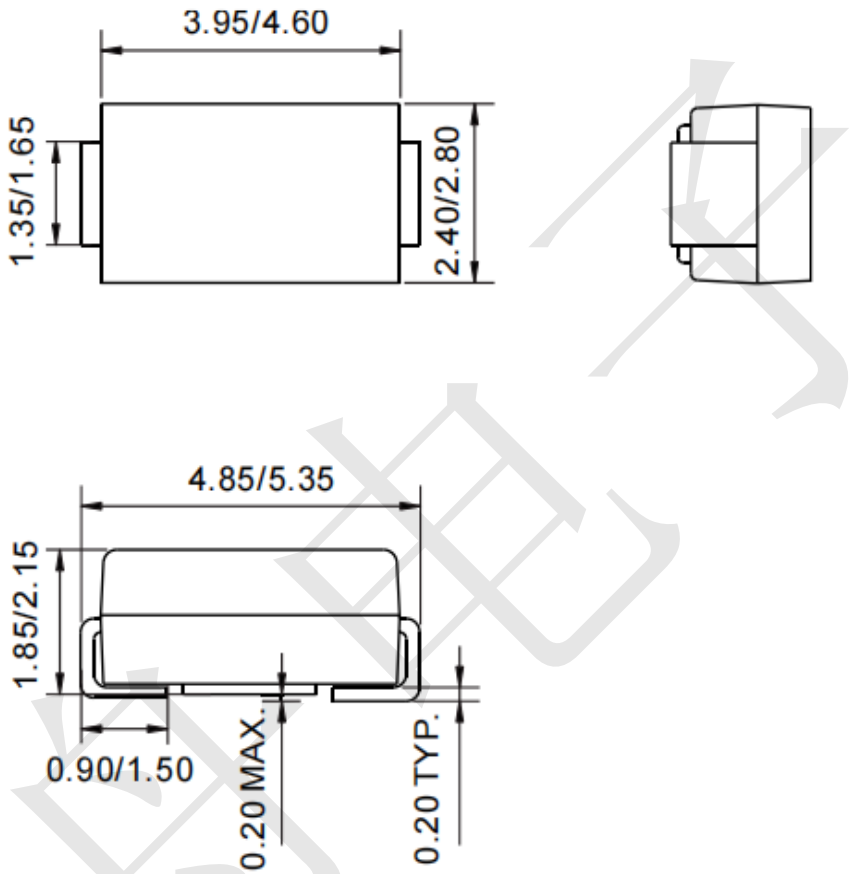

Mounting Pad Layout (unit: mm)

