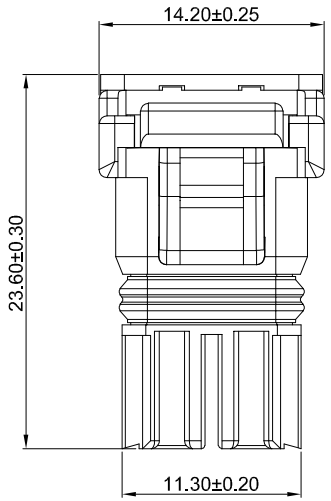

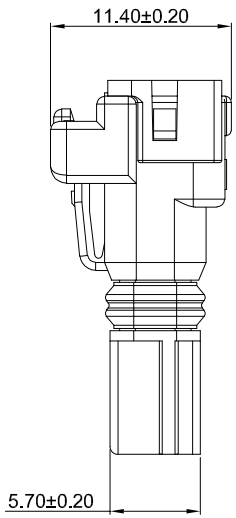

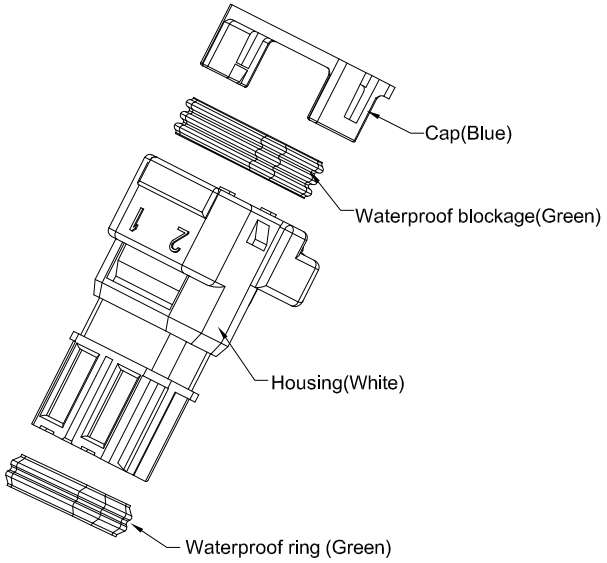

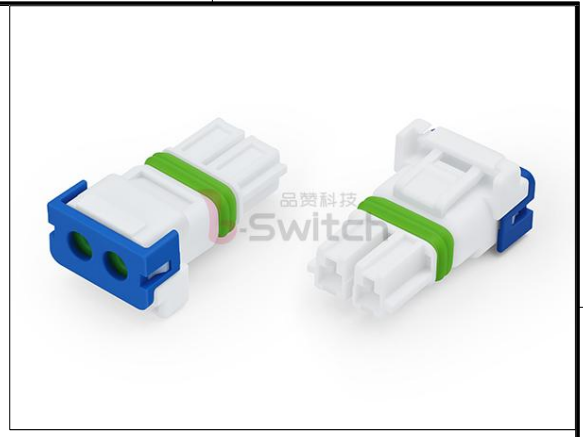

GT-C5001 H M -1 02 X 01

- **G-Switch**
- **Series No**
- **Connector** H-Housing
- **M-Male**
- **Row NO** 1-Single Row
- **Pin Q' PY** 02
- **Housing Colour** W-White

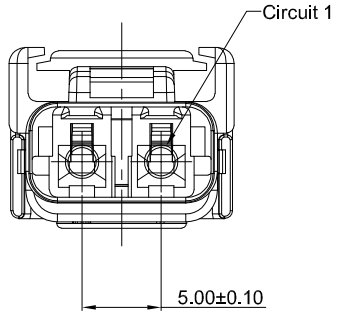

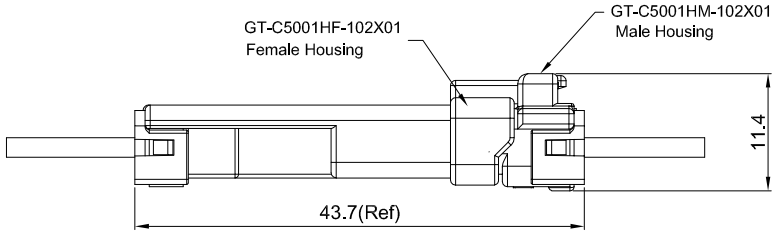

MATING HEIGHT

G-Switch Specification:

1.Current rated: 13.0A AC/DC 14 AWG Teflon Electric Wire,
Waterproof grade:IP68(Anti immersion type)
10.5A AC/DC 16 AWG Silicone Rubber Electric Wire,
Waterproof grade:IP69K
2.Voltage rating: 300V AC/DC
3.Withstanding voltage:3000V AC
4.Contact resistance: 10mΩ max.
5.Insulation resistance: 1000MΩ min
6.Durability cycle: 50Cycles
7.Removal force: 5.0kgf/Pin min
8.Operating temperature range: -40°C ~ +85°C

IP69K

IP68
1. 5m/30min

Pb Process Capable
RoHS Compliant EU RoHS Standards

NO.	PART NAME	MATERIAL	REMARK
1	HOUSING	PBT,94V-0	WHITE

SCALE: 1:1	UNIT: mm	Title: Housing 5.00mm Pitch WPJV Single Row Male	
SIZE: A4		Model Code: GT-C5001HM-102X01	
Unless otherwise General Tolerance: X ±0.40, X.x ±0.30, X.xx ±0.20, X° ±5°, X.x° ±3°			

DRAWN	CHECKED	APPROVED	DATE
Hu	Chen	Chen	2021.10.21

品赞科技 b-Switch www.dg-switch.com

REV: A0 SHEET: 1/1