REVISIONS					
REV.	ECN NO.	LOCATION	DESCRIPTION	DATE	DESIGN
A0	N/A		INITIAL RELEASE	2025.08.04	阿树
/	N/A		/	/	/

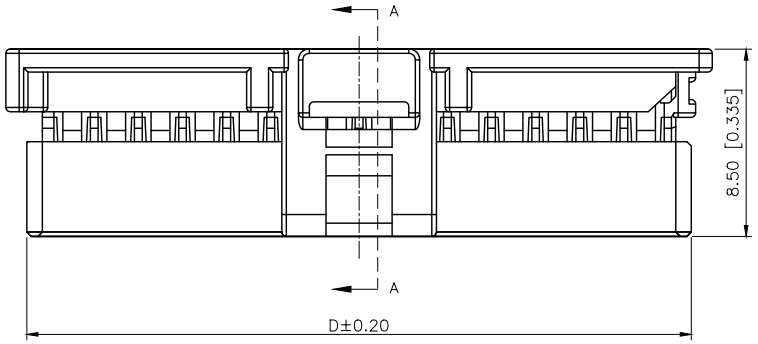

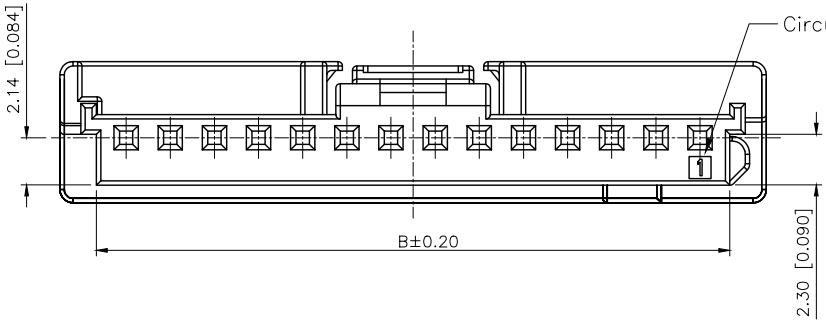

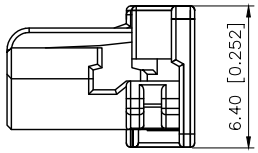

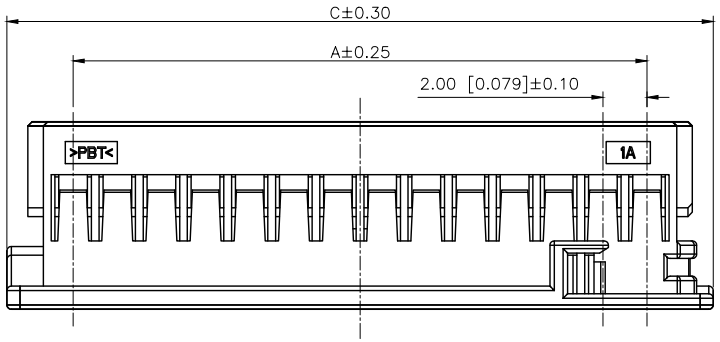

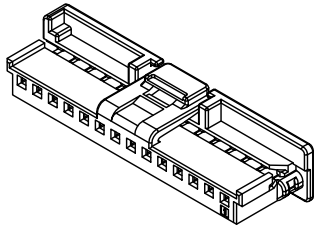

Specifications(规格)：
1.Voltage rating(额定电压):125V AC/DC
2.Current rating(额定电流):3A AC/DC
3.Withstanding voltage(耐压值):1000V AC/minute
4.Insulation resistance(绝缘电阻):≥1000MΩ
5.Contact resistance(接触电阻):≤25mΩ
6.Temperature range(使用温度):−40℃~+125℃

PART NO.:

X2009 H M−03 B−PT
① ② ③ ④ ⑤ ⑥

①Series Number
②Category: T−terminal
③Category:M−Male Housing
④Row No.Pin No:XX−02~15P
⑤B:Long style
⑥Material:PT−PBT UL94V−0 Natural

Poles	Dimensions(mm)			
	A	B	C	D
02	2.00	4.70	8.00	6.10
03	4.00	6.70	10.00	8.10
04	6.00	8.70	12.00	10.10
05	8.00	10.70	14.00	12.10
06	10.00	12.70	16.00	14.10
07	12.00	14.70	18.00	16.10
08	14.00	16.70	20.00	18.10
09	16.00	18.70	22.00	20.10
10	18.00	20.70	24.00	22.10
11	20.00	22.70	26.00	24.10
12	22.00	24.70	28.00	26.10
13	24.00	26.70	30.00	28.10
14	26.00	28.70	32.00	30.10
15	28.00	30.70	34.00	32.10

X2009HM−03B−PT	PBT	X2009W	X2009TF−B
PART NO	Material	Suitable XKB Wafer	Suitable XKB Terminal

AuGLAR	±5°
X.	±0.40
X.x	±0.30
X.xx	±0.20
X.xxx	±0.15
UNSPECIFIED TOLERAuCES	

XKB 星创 Connection

DESIGN	阿树	VIEW:	MODEL TYPE: 2.00mm Crimp Style Connectors
CHECKED		UNIT: mm/in	PART NO.: X2009HM−03B−PT
APPROVED		SIZE: A4	DWG NO.: X−X2009HM−03B−PT

XKB INDUSTRIAL PRECISION CO.,LIMITED

SCALE	PAGE	REVISION
N/A	1/2	A0

REVISIONS					
REV.	ECN NO.	LOCATION	DESCRIPTION	DATE	DESIGN
A0	N/A		INITIAL RELEASE	2025.08.04	阿树
/	N/A		/	/	/

02 Pin

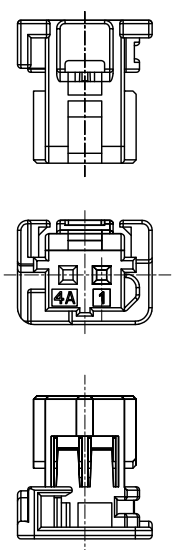

03 Pin

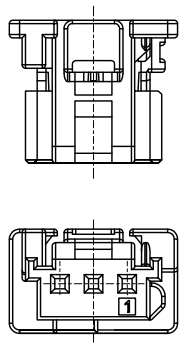

04 Pin

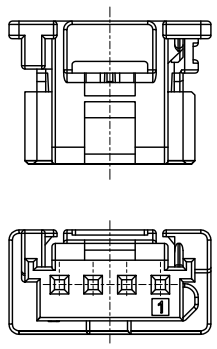

05 Pin

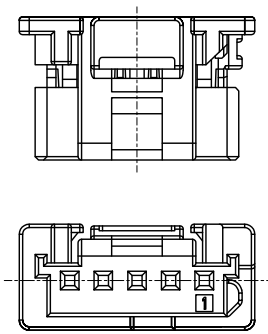

06 Pin

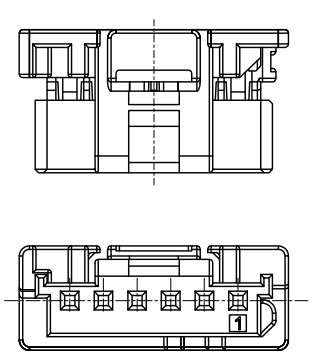

07~15 Pin

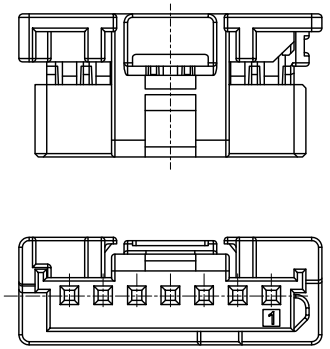

AuGLAR	±5°
X.	±0.40
X.x	±0.30
X.xx	±0.20
X.xxx	±0.15
UNSPECIFIED TOLERAuCES	

XKB 星创 Connection

DESIGN	阿树	VIEW:	MODEL TYPE: 2.00mm Crimp Style Connectors
CHECKED		UNIT: mm/in	PART NO.: X2009HM-03B-PT
APPROVED		SIZE: A4	DWG NO.: X-X2009HM-03B-PT

XKB INDUSTRIAL PRECISION CO.,LIMITED

SCALE	PAGE	REVISION
N/A	2/2	A0