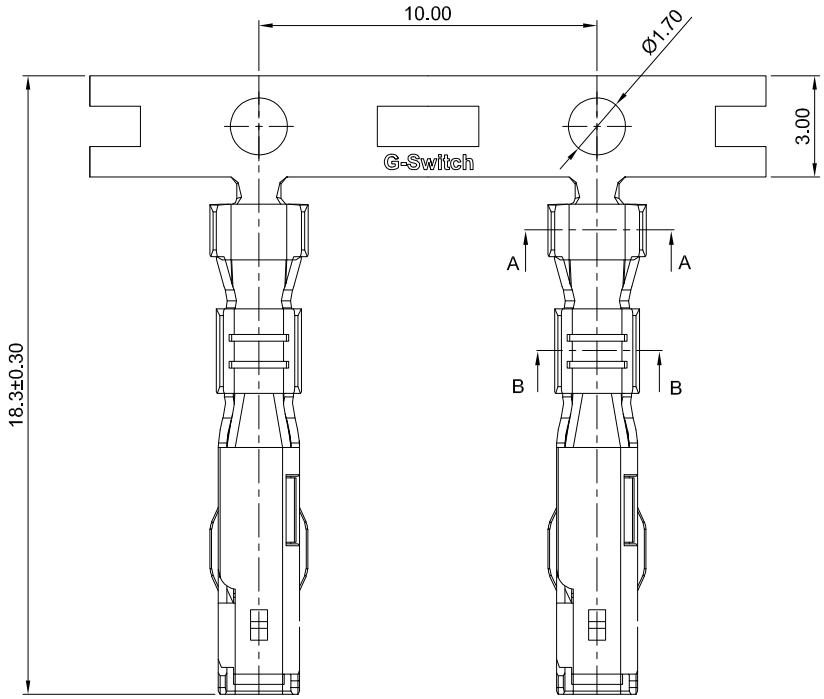

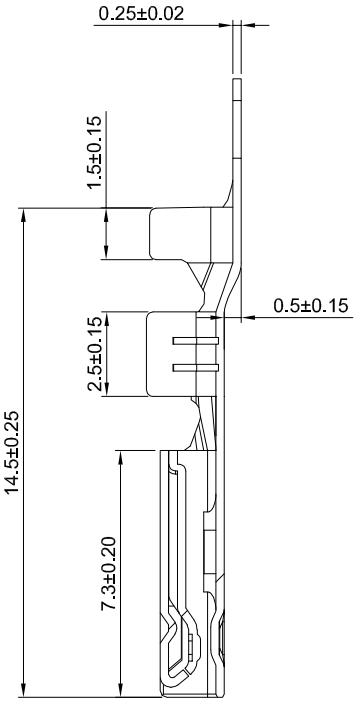



GT-C5001 T F -X XX X

- **G-Switch**
- **Series No**
- **Connector**
  T-Terminal
- **F-Female**
- **Metal**
  H-High Conductivity Copper Alloy
- **Terminal Plating**
  BT-Bright Tin
  11-All G/F
- **Type**
  1-Type 1
  2-Type 2

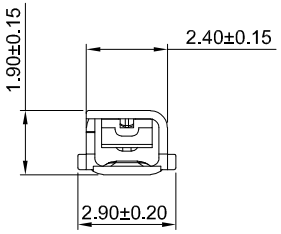

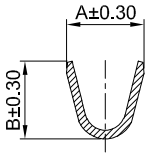

SECTION:A-A

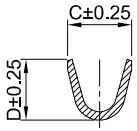

SECTION:B-B

G-Switch Specification:

1.Current rated: 13.0A AC/DC 14 AWG Teflon Electric Wire,
Waterproof grade:IP68(Anti immersion type)
10.5A AC/DC 16 AWG Silicone Rubber Electric Wire,
Waterproof grade:IP69K
2.Voltage rating: 300V AC/DC
3.Withstanding voltage:3000V AC
4.Contact resistance: 10mΩ max.
5.Insulation resistance: 1000MΩ min
6.Durability cycle: 50Cycles
7.Removal force: 5.0kgf/Pin min
8.Operating temperature range: -40°C ~ +85°C

IP69K



Part NO	Material	Plating	Wire Size	Dim A	Dim B	Dim C	Dim D	Insulation O.D	Reel/PCS
GT-C5001TF-HBT2	High Conductivity Copper Alloy C7025	Bright Tin	AWG#20~#22	2.90	2.60	2.50	2.40	1.80mm(Max)	5000
GT-C5001TF-HBT1	High Conductivity Copper Alloy C7025	Bright Tin	AWG#14~#18	3.40	3.60	2.50	2.40	2.4mm(Max)	4000

Pb Process Capable | RoHS Compliant EU RoHS Standards

SCALE: 1:1	UNIT: mm	Title:	Terminal 5.00mm Pitch WPJV Crimp Style Female
SIZE: A4		Model Code:	GT-C5001TF-XXXX

Unless otherwise General Tolerance:

X	±0.40
X.x	±0.30
X.xx	±0.20
X°	±5°
X.x°	±3°

DRAWN	CHECKED	APPROVED	DATE
Hu	Hu	Chen	2021.10.20

品赞科技 b-Switch ®
www.dg-switch.com

REV: A0 SHEET: 1/1