APPROVAL SHEET

Customer:	
Customer Part NO.	
Part NO.	**CDL035M471G10PC97V00A**
Item:	**470uF/35V**
Catalog Series:	**CDL Series**
Date of Issue:	**JUN.01.2026**
Approved NO. :	**SD20220600015**

BUYER'S STAMP	Approvaled by			

Su'scon	Submitted by			
	Approval	Check	Affirm	Design
東莞冠坤電子有限公司 發行 2022-06-01 工程部	工程部 2022-06-01 劉銘坤	工程部 2022-06-01 鐘 華	工程部 2022-06-01 莫明強	工程部 2022-06-01 賴彤影

China – DongGuan Kuan Kun Electronic Co., Ltd.
Tel: 86-769-87318000 Fax: 86-769-87318008

Halogen Free RoHS COMPLIANT Environmental-Benefit Products

RECORD OF REVISION

NO.	VERSION	REASON	DATE	CHECKED	REMARKS
1	A00	First Release	2026.06.01	王代燕	
2					
3					
4					
5					
6					
7					
8					
9					
10					
11					
12					
13					
14					
15					
16					
17					
18					
19					
20					
21					
22					
23					
24					
25					
26					
27					
28					
29					
30					

CDL Specification For Approval

NO.	Customer Part No.	Specification	Part No.
1		EC,470uF/35V	CDL035M471G10PC97V00A
2			
3			
4			
5			
6			
7			
8			
9			
10			
11			
12			
13			
14			
15			
16			
17			
18			
19			
20			
21			
22			
23			
24			
25			

Explanation of Parts Numbers (ERP System)

Draw Up:1999.12.15	Codification:DKK/Ⅲ-00-002

Explanation of Parts Numbers

1	2	3	4	5	6	7	8	9	10	11	12	13	14	15	16	17	18	19	20	21
C	D	L	0	3	5	M	4	7	1	G	1	0	P	C	9	7	V	0	0	R/A
[Series]			[Voltage]			[Capacitance Tolerance]	[Capacitanc Code]			[Diameter]	[Length]		[Special Remark]	[Customer Code]			[Type Code description]			R=RoHS/Free Halogen A=Automotive products RoHS/Free Halogen

[Voltage]		
004=4V		
006=6.3V		
010=10V		
016=16V		
025=25V		
035=35V		
050=50V		
063=63V		
080=80V		
100=100V		
160=160V		
350=350V	180=180V	
400=400V	200=200V	
420=420V	250=250V	
450=450V	315=315V	
500=500V	330=330V	

[Capacitance Tolerance]
J= ±5 %
K= ±1 0%
M= ±20 %
A= 0 %~+20 %
S= 0 %~+40 %
R= 0 %~+50 %
D= -5 %~+20 %
V= -10 %~+20 %
Q= -10 %~+30 %
T= -10 %~+50 %
E= -15 %~+20 %
I= -30 %~+20 %
B= +10 %~+30 %
N= +10 %~+25 %
C= -5 %~+15 %

[Capacitanc Code]
0R1=0.1uF
1R0=1uF
100=10 uF
101=100 uF
102=1000 uF
103=10000 uF
223=22000 uF
G52=1650 uF

[Diameter]		
B=3Φ		
C=4Φ		
D=5Φ		
E=6.3Φ		
F=8Φ		
G=10Φ		
H=12Φ	Y=14.5Φ	
X=12.5Φ	W=42Φ	
I=13Φ	R=51Φ	
J=16Φ	S=64Φ	
K=18Φ	T=76Φ	
L=20Φ	U=90Φ	
M=22Φ	V=100Φ	
N=25Φ		
O=30Φ		
P=35Φ		
Q=40Φ		
A=11.5Φ		

[Length]

1) Length < 100mm Integer,Input it direct.

2) Length < 100mm Decimal,Please refer the code as below: Ex:11.5 isBB; 5.4 is 5A;

3. Length ≧ 100mm,First digit input No.0~9，2nd 、3rd refer as below Code11 Ex:115,Input B5.

Code12	Meaning		
A	10		
B	11		
C	12		
D	13		
E	14		
F	15		
G	16		
H	17		
I	18		
J	19	M	22
K	20	N	31
L	35		

Code13	Meaning
A	0.4
B	0.5
C	0.6
D	0.7
E	0.8
F	0.9
G	0.1
H	0.2
I	0.3

[Special Remark]

RADIAL	B=Forming Only C=Lead Cut D=Lead Cut and Crimp N=Lead spacing expand to 2.0 mm then Cut E=Lead spacing expand to 2.5 mm then Cut F=Lead Forming spacing 5.0 mm thenCut H=Lead Forming Cut and Crimp S=Long Lead L=Facing cathode:Lead Cut and Bending (turn right) Z=Facing cathode:Lead Cut and Bending (turn left) P=Taping (Ammo pack) R=Tape and Reel V=V-chip Type (SMD)	<1>Code No.18 is"P",Code No.19、20 is stand for Lead pitch. <2>Code No.18 is C,N,E,F,D,H,W,K,L,Z, Code No.19、20 is stand for Lead length. <3>Code No.18 is S,Code No.19、20 be filled in "00" is stand for General Long Lead
Lug	G= LG Type Terminal PCS= PC board pin-out Straight Terminal PCY= PC board pin-out LUG Terminal PCU= PC board pin-out U-Insert Terminal PCB= PC board pin-out Bend Terminal ST= Straight Type Terminal U= 5 Pin Straight Terminal W= Screw Terminal YL= Snap	<4>Code No.18 is "B",Code No.19、20 be filled in "00" is stand for Forming Long Lead

[Type Code description]

Code 13	Meaning
T	Convex Rubber seal {Standard：Lead Type 12.5Φ≦D≦18Φ(Breathe freely}
P	Flat Rubber seal {Standard：Lead Type 3Φ≦D≦12Φ；20Φ、22Φ、25Φ}
0	Snap-in,U-LUG Type

[Customer Code]

C97	Customer No.

2.ERP P/N System compare with NCC's Description

(1) "Finished Products" ----21 Codes，

(2) Snap in Type---- "Semi-finished products P/N" has not demand，It's also 21 Codes

(3) Lead Type---- 17 codes for "Semi-finished products" ，It's 17 codes (If Specially enquire and 17 codes can not be reached, It will be 21 code for that)

(4) Codes No.14：Specially Code，It's difference between clients enquire and same Spec multiple enquired.

(5) Codes No.15~17 which is for clients Code.

(6) Length of Lead Cut and Forming bigger than10.0mm or appendix digit，Letters Description。

DONG GUAN KUAN KUN ELECTRONIC CO., LTD

YIN HE INDUSTRIAL ZONE, QING XI TOWN, TEL: +86-769- 83086886
DONG GUAN CITY, GUANG DONG CHINA (P.R.O.C) FAX: +86-769- 83086886

FOR APPROVAL

Fig.1 ΦD=6.3~10mm

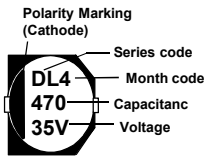

Fig.2 ΦD≧12.5mm

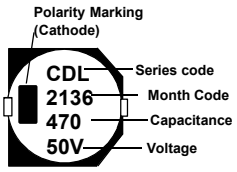

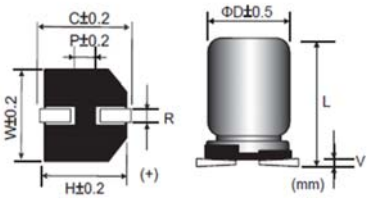

Size	ΦD	L	W	H	C	R	P	Vmax
6.3*7.7	6.3	7.7±0.3	6.6	6.6	7.2	0.5~0.8	2.1	0.3
8*10	8.0	10±0.5	8.3	8.3	9.0	0.7~1.1	3.2	0.3
10*10	10.0	10±0.5	10.3	10.3	11.0	0.7~1.3	4.5	0.3
12.5*13.5	12.5	13.5±0.5	13.0	13.0	13.7	1.1~1.4	4.5	0.4
12.5*16	12.5	16±0.5	13.0	13.0	13.7	1.1~1.4	4.5	0.4
16*16.5	16.0	16.5±0.5	17.0	17.0	18.0	1.4~1.8	6.4	0.4

Customer:	**Electrolytic Capacitors CDL Series**											**Code**
Electric Characteristics:												
P/N	P/N	Cap. (uF)	Cap. Tol. (%)	Rate Volt. (V-DC)	Surge Volt. (V-DC)	Oper. Temp. (℃)	Nominal Case Size D*L(mm)	Leakage Current Max (uA)	D.F. MAX (%)	R.C 100KHz (mA rms)	IMP 100KHz 25℃(Ω)Max	Load Life (hours)
	CDL035M471G10PC97V00A	470	±20	35	40.3	105	10*10	164	14	850	0.090	5000

REMARKS:

1. Leakage Current Test: **6.3V ~100V at 20℃ for 2 minutes ;**

2. Operating temperature: **6.3V~100V -55℃~ +105℃ ;**

3. .Dissipation Factor Test: **at 20℃, 120 Hz.**

4. Capactitance Test: **at 20℃, 120 Hz.**

5. Ripple Current Test: **at 105℃, 100K Hz ;**

6. Load Life: **5000 hours, with application of rated voltage at 105℃.**

Capacitance Change: **Within ±30% of initial value;**

tanδ: **300% or less of initial specified value;**

Leakage Current: **Initial specified value or less;**

7. Shelf Life: **The following specifications shall be satisfied when the capacitors are restored to 20℃ after exposing them for 1000 hours 105℃ without voltage applide. Before the measurement, the capacitor shall be preconditioned by applying voltage according to them 4.1 of JIS C5101-4.**

Capacitance Change: **Within ±30% of initial value;**

tanδ: **300% or less of initial specified value;**

Leakage Current: **Initial specified value or less;**

8. when have characteristic requested: **Load life & shelf life test and etc. , judgment standard reference to our catalogue.**

9.Remarks: **Su'scon Part Number with suffix code "A" is specially offered for automotive project, which meets AEC-Q200 standard.**

●SPECIFICATION

Leakage Current 洩漏電流	After 2 minutes application of rated voltage,leakage current is not more than 0.01cv or 3(uA),whichever is greater.								
Dissipation Factor 散逸因素（損失角） (tan δ)	Measurement Frequency:120Hz. Temperature:20℃								
	Rate Voltage(V)	6.3	10	16	25	35	50	63	80	100
	tan δ （MAX)	0.30	0.26	0.22	0.16	0.14	0.14	0.08	0.08	0.07
Low Temperature Stability 低溫特性 Impedance Ratio(MAX) 阻抗比率(MAX)	Measurement Frequency:120Hz.								
	Rate Voltage(V)	6.3	10	16	25	35	50	63	80	100
	Z(-25℃)/Z(20℃)	4	3	2	2	2	2	2	2	2
	Z(-55℃)/Z(20℃)	8	5	4	3	3	3	3	3	3

●Frequency Coefficient of Permissible Ripple Current

Frequency (Hz)	120 ≦ F < 1K	1K ≦ F < 10K	10K ≦ F < 100K	100K ≦ F
≦ 33	0.35	0.70	0.90	1.00
33 ~ 150	0.40	0.85	0.92	1.00
>150	0.60	0.85	0.95	1.00

The endurance of capacitors is reduced with internal heating produced by ripple current at the rate of halving the lifetime with every 5℃ rise.
When long life performance is required in actual use, the rms ripple current has to be reduced.

一. Scope 適用范圍 :

This specification applies to aluminium electrolytic capacitor , used in electronic equipment .

本說明對于用電子儀器設備進行檢測之鋁電解電容器 適用.

二. TABLE-TABLE OF METHODS REFERENCED ALUMINUM ELECTROLYTIC CAPACITORS表-铝电解电容器参考方法

NO.	Stress应力方式	Reference参考方法	Additional Requirements 附加要求	SPECIFICATION 规格
1	Pre- and Post- Stress Electrical Test 应力测试前后电气测试	User spec.用户规格	Test is performed except as specified in the applicable stress reference and the additional requirements in Table 3.需进行测试，除了适用的应力测试标准和表3中的附加要求指定之外。	In the experimental report 分布在試驗報告中
3	High Temperature Exposure (Storage) 高温存储	MIL-STD-202 Method 108	1000 hrs. at rated operating temperature (e.g. 85°C part can be stored for 1000 hrs at 85°C. Same applies for 105°C & 125°C). Unpowered. Measurement at 24±4 hours after test conclusion. 在额定工作温度下放置器件1000小时（例如：85℃的产品可以在85℃下存储1000小时，同样地也适用于105℃和125℃的产品），不通电。试验结束后24±4小时内进行测试。	Capacitance change Tan δ .Rate of change: please have a look at this eries of shelf life standard. less than specified value . Appearance : no abnormal . 容量.損失角,的變化標準：請見該系列的放置壽命說明標準 泄漏電流：低于初期規定值 . 外 觀 : 無異常 .
4	TemperatureCycling 温度循环	JESD22Method JA-104	1000 cycles (-40°C to 105°C) Note: If 85°C or 125°C part the 1000 cycles will be at that temperature rating. Measurement at 24±4 hours after test conclusion. 30min maximum dwell time at each temperature extreme. 1 min. maximum transition time. 1000个循环（-40℃到105℃）。注意：如果85℃或125℃的产品，1000个循环应在其温度等级下进行。试验结束后24±4小时内进行测试。每个温度的停留时间不超过30分钟，转换时间不超过1分钟。	Capacitance change : within ±20% of the initial specified value. Tan δ :200% of initial specified value .Leakage current : less than specified value .Appearance : no abnormal . 靜電容量變化： 最初規定值的 ±20%以內. 損失角：規定值2倍 ,泄漏電流：低于規定值, 外 觀 : 無異常 .
7	Biased Humidity 偏高湿度	MIL-STD-202 Method 103	1000 hours 85°C/85%RH. Rated Voltage. Measurement at 24±4 hours after test conclusion. 在温度85℃，湿度85%的条件下放置1000小时。额定电压。试验结束后24±4小时内进行测试。	Capacitance change : within ±20% of the initial specified value. Tan δ :less than specified value .Leakage current : less than specified value .Appearance : no abnormal . 靜電容量變化： 最初規定值的 ±20%以內. 損失角：低于規定值 ,泄漏電流：低于規定值, 外 觀 : 無異常 .
8	Operational Life 工作寿命	MIL-STD-202 Method 108	Note: 1000 hrs @ 105°C. If 85°C or 125°C part will be tested at that temperature. Rated Voltage applied. Measurement at 24±4 hours after test conclusion. 注意：1000小时@ 105℃。如果85℃或125℃的产品，应在其温度下进行。施加额定的电压。试验结束后24±4小时内进行测试。	Capacitance change Tan δ .Rate of change: please have a look at this eries of load life standard. less than specified value . Appearance : no abnormal . 容量.損失角,的變化標準：請見該系列的負荷壽命說明標準 泄漏電流：低于初期規定值 . 外 觀 : 無異常 .
9	External Visual 外观	MIL-STD-883 Method 2009	Inspect device construction, marking and workmanship. Electrical Test not required. 检查器件结构，标识和工艺质量。不要求电气测试。	In the experimental report 分布在試驗報告中
10	Physical Dimension 尺寸	JESD22Method JB-100	Verify physical dimensions to the applicable device detail specification. Note: User(s) and Suppliers spec. Electrical Test not required. 按适用的器件规格验证物理尺寸。注意：用户和供应商规格。不要求电气测试。	Do judgement, according to the specification sheet. 依據規格書判斷

NO.	Stress应力方式	Reference参考方法	Additional Requirements 附加要求	SPECIFICATION 规格
12	Resistance to Solvents 溶剂抵抗	MIL-STD-202 Method 215	Note: Also aqueous wash chemical - OKEM clean or equivalent. Do not use banned solvents. 注意：水洗清洗剂-OKEM清洗剂或其它相同的溶剂。不要使用禁止的溶剂。	Capacitance change : within ± 5% of the initial specified value. Tan δ :less than specified value .Leakage current : less than specified value ,Appearance： Print without loss, appearance without exception 靜電容量變化： 最初規定值的±5%以內.損失角：低于規定值 .泄漏電流：低于規定值,外观：印刷字体无脱落及外观无异常
13	Mechanical Shock 机械冲击	MIL-STD-202Method 213	Figure 1 of Method 213. Condition C 方法213图表1，条件C。 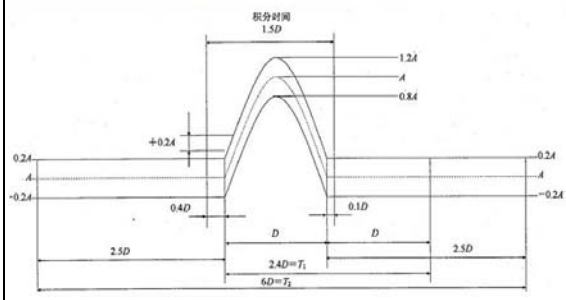 	Capacitance change : within ± 5% of the initial specified value. Tan δ :less than specified value .Leakage current : less than specified value .Appearance : no abnormal . 靜電容量變化： 最初規定值的±5%以內.損失角：低于規定值 ,泄漏電流：低于規定值, 外 觀 ：無異常 .
14	Vibration 振动	MIL-STD-202Method 204	5g's for 20 minutes 12 cycles each of 3 orientations. Note: Use 8"X5" PCB .031" thick with 7 secure points on one 8" side and 2 secure points on corners of opposite sides. Parts mounted within 2" from any secure point. Test from 10-2000 Hz. 5G 20分钟，三个方向每个方向12个循环。注意：使用8"X5" 印刷线路板，.031" 厚，在长的一边有7个固定点，在对面的边的角有2个固定点。产品在距离固定点2"内安装。测试频率从10-2000赫兹。	Capacitance change : within ± 5% of the initial specified value. Tan δ :less than specified value .Leakage current : less than specified value , No damage or leakage of electrolyte . 靜電容量變化： 最初規定值的±5%以內.損失角：低于規定值 .泄漏電流：低于規定值 , 無損傷或電解液漏出 .
15	Resistance to Soldering Heat 抗焊接热	MIL-STD-202 Method 210	Condition B no pre-heat of samples. Note: Single Wave Solder. Procedure 1 with solder within 1.5mm of device body for Leaded and 0.75mm for SMD. SMD – remove carrier. 条件B，样品不进行预热。注意：单一波峰焊。按程序1焊接，对于引脚器件浸入器件本体的1.5mm的深度，对于表面贴装元件为0.75mm。表面贴装元件-去除载体。	Capacitance change : within ± 10% of the initial specified value. Tan δ :less than specified value .Leakage current : less than specified value . 靜電容量變化： 最初規定值的±10%以內.損失角：低于規定值 . 泄漏電流：低于規定值 .

NO.	Stress应力方式	Reference参考方法	Additional Requirements 附加要求	SPECIFICATION 規格
17	ESD 静电放电	AEC-Q200-002 or ISO/DIS10605	無	Capacitance change : within ± 5% of the initial specified value. Tan δ :less than specified value .Leakage current : less than specified value . 靜電容量變化： 最初規定值的±5%以內.損失角：低于規定值 . 泄漏電流：低于規定值 .
18	Solderability 可焊性	J-STD-002	For both Leaded & SMD. Electrical Test not required. Magnification 50 X. Conditions: Leaded: Method A @ 235°C, category 3. SMD: a) Method B, 4 hrs @ 155°C dry heat @235°C b)Method B @ 215°C category 3 c)Method D category 3 @ 260°C. 用于引脚和表面贴装元件，不需要电气测试。放大倍数50倍。测试条件： 引脚产品：方法A@235℃，类别3。 表面贴装元件：a) 方法B, 4 小时@155℃干热@235℃ b)方法B @215℃ 类别3。 c)方法D 类别3 @260℃	The solder alloy shall cover the 95% or more of the dipped lead's area . 錫液要覆蓋導針浸入表面積 的95% 以上 .
19	Electrical Characterization 电气特性	User Spec.用户规格	Parametrically test per lot and sample size requirements, summary to show Min, Max, Mean and Standard deviation at room as well as Min and Max operating temperatures. 按批次和样品数量要求进行参数试验，总结列出室温下及最低，最高工作温度下器件的最小值，最大值，平均值和标准偏差。	Capacitance change :within ± 20% of the initial measured value.Leakage current : less than specified value . 靜電容量變化：最初測定值的±20%以內.125℃為規格值10倍以下，105℃為規格值8倍以下，85℃為規格值5倍以下,損失角：低于規定值 .
20	Flammability可燃性	UL-94	V-0 or V-1 Acceptable. Test is applicable to components having a resin case. V-0或V-1可接受。此项测试适用于有树脂底座的器件。	
21	Board Flex 板弯曲	AEC-Q200-005	60 sec minimum holding time. 至少60秒的支撑时间	
22	Terminal Strength (SMD) 端子强度（表面贴装元件）	AEC-Q200-006	無	Capacitance change : within ± 5% of the initial specified value. Tan δ :less than specified value .Leakage current : less than specified value . 靜電容量變化： 最初規定值的±5%以內.損失角：低于規定值 . 泄漏電流：低于規定值
27	Surge Voltage 浪涌电压	JIS-C-5101-1	Rated surge voltage shall be applied (swich on) for 30 ± 5 seconds and then shall be applied (swich off) with discharge for 330± 5 seconds at room temperature . This cycle shall be repeated for 1000 cycles .Duration of one cycle is 6 ± 0.5 minutes . 在常溫下施加 (合上開關) 額定涌浪電壓 30 ± 5 秒, 然後停止施加 (斷開開關) 涌浪電壓並且放電 330 ± 5秒. 這個循環要重复1000 次 . 以 6 ± 0.5 分鍾為一個循環周期 .	Capacitance change : within ± 15% of the initial specified value. Tan δ :less than specified value .Leakage current : less than specified value . Appearance : no abnormal . 靜電容量變化： 最初規定值的 ± 15%以內.損失角：低于規定值 . 泄漏電流：低于規定值 . 外 觀: 無異常 .

三. Electrical/Mechanical Characteristics 電氣/機械特性:

<table>
<tr><td>3.1</td><td>SERIES</td><td>CDL</td></tr>
<tr><td>3.2</td><td>Rated voltage
額定電壓</td><td>6.3~100VDC</td></tr>
<tr><td>3.3</td><td>Operating
Temperature Range
應用溫度範圍</td><td>Operating temperature range is the range of allowable working temperature at
Which the capacitor can be operated continuously at rated voltage.
溫度範圍: 指電容器在額定電壓連續使用時, 其允許的溫度範圍。
spec: 6.3V~100V
-55℃~+105℃</td></tr>
<tr><td>3.4</td><td>Capacitance
靜電容量</td><td>Measuring Temperature
測 試 溫 度: 20±2℃
Measuring frequency :
測 定 頻 率: 120 ± 20%
Measuring voltage
測 定 電 壓: 0.5Vrms or less +1.5 to 2.0V_{DC}
Measurement circuit :
測 定 電 路:〔 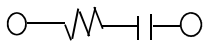 〕 spec: ±20%(M)</td></tr>
<tr><td>3.5</td><td>Dissipation factor
散逸因素(tan δ)</td><td>Measurement shall be made under the same conditions as those
given for the measurement of capacitance.
測試電容時,須符合以下之規定.
spec:
<table>
<tr><td>Rated Voltage (V)</td><td>6.3</td><td>10</td><td>16</td><td>25</td><td>35</td><td>50</td><td>63</td><td>80</td><td>100</td></tr>
<tr><td>tan δ(Max)</td><td>0.30</td><td>0.26</td><td>0.22</td><td>0.16</td><td>0.14</td><td>0.14</td><td>0.08</td><td>0.08</td><td>0.07</td></tr>
</table></td></tr>
<tr><td>3.6</td><td>Leakage current
洩漏電流</td><td>DC leakage current shall be measured after 1~3 minutes application of the
在20 ℃下以工作電壓. 施加電流於串聯電容器之電阻1000Ω 1~3分後 測定直流漏電流.
Measurement circuit 測定電路:
 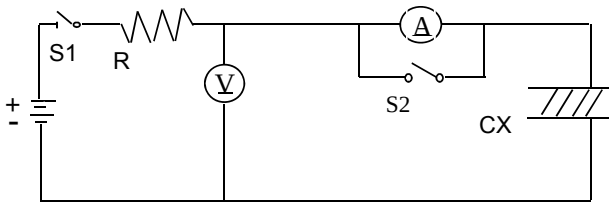

R : 1000 ± 100Ω
S1 : Switch 開關
(A): DC current meter
直流電流計
S2 : Switch for protect of current meter
直流電流計的保護開關
(V): DC voltage meter
直流電壓計
CX :Test capacitor
測試電容

The following specifications shall be satisfied when the rated voltage
is applied for the required time.
印加額定工作電壓, 其通電時間.須符合下面要求.
spec: I≦0.01CV or 3(uA),which is greater.(After 2 minutes application of rated voltage)</td></tr>
</table>

SMD 产品是符合J-STD020中的Reflow條件,具體條件如下:
SMD products are in line with the J - STD020 Reflow conditions and specific conditions are as follows:

Reflow Soldering Test

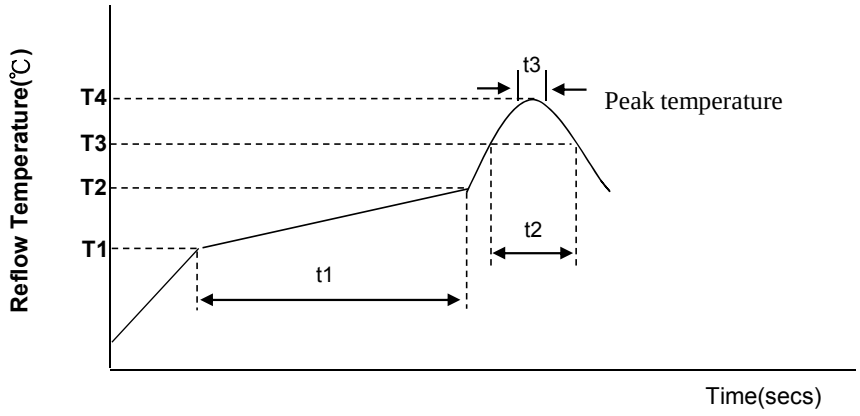

3.7 Reflow Soldering Temperature Profile 回焊爐測試

Test conditions

Profile Feature	Pb Free Assembly	
	4~6.3Ø	8~10Ø
Average Ramp-up Rate	3℃/second max	3℃/second max
Preheat Temperature Min(T1 min) Temperature Max(T2 max) Time (t1 Max)	 150℃ 180℃ 120secs	 150℃ 180℃ 120secs
Ramp-up Rate (T2 ~T3)	3℃/second max	3℃/second max
Time maintained above Temperature(T3) Time(t2 Max)	217℃ 90secs	217℃ 40secs
Peak Temperature(T4)	260℃	245℃
Time(t3 Max)	5secs	5secs
Reflow cycles	1	2 or less

* Please ensure that the capacitor became cold enough to the room temperature(5~35℃) before the second reflow.

3.8 Standards 參考標準: JIS C-5101-4(IEC 60384)

Marking :

Fig.1 ΦD=6.3~10mm

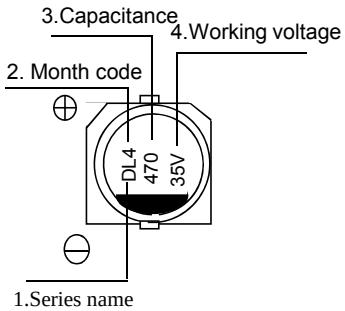

Fig.2 ΦD≧12.5mm

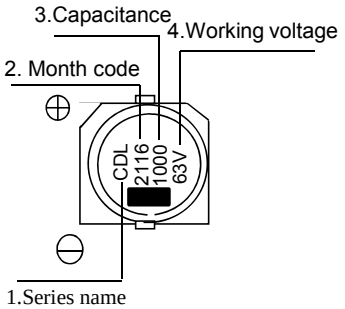

1.Series name:

Fig.1	Code	S	H	N	K	D	DL	**Fig.2**	CS	CH	CN	CK	CD	CDL
	Series	CS	CH	CN	CK	CD	CDL		CS	CH	CN	CK	CD	CDL

2.Month code:

Fig.1	Code	1	4	7	O	**Fig.2**	Date Code	Production Date
	Month	1~3	4~6	7~9	10~12		2116	The16th week of 2021Y

3.Capacitance:

Code	10	100	1000
Capacitance ('uF)	10	100	1000

4.Working voltage:

Code	6.3V	10V	16V	25V	35V	50V
WV (V)	6.3V	10V	16V	25V	35V	50V

鋁電解電容器存放環境與控制

Storage Conditions and Control for Aluminum Electrolytic Capacitor

1. 環境溫度 : **5**℃ ~ **35**℃, 環境相對濕度 : 75%以下 .

Store the capacitor at a temperature of 5℃ to 35℃ and at a relative humidity of less than 75% .

2. 存放環境不應有陽光直射, 不宜高溫 .

Store the capacitor in low temperature places free from direct sun shine .

3. 存放環境不能有鹽分、油含量高的霧气 .

Store the capacitor in places free from oil vapor、salt water vapor.

4. 存放在遠離氯气、氨气、硫化氫、亞硫酸、硝酸等有害氣體含量高的地方.

Store the capacitor in places far from toxic gases (chlorine、ammonium、hydrogen sulfide、 sulphurous acid、nitric acid , etc) .

5. 儲存環境不能有臭氧、紫外線或幅射.

Store the capacitor in place free from Ozone、ultraviolet ray or radiation .

Detergent needing attention:

使用清潔劑之注意事項:

Hydrogen carbide liquid and halogen liquid can cause Aluminium Electrolytic Capacitor to corrode. Some of Safe and Unsafe detergent are as follows;

鋁質電解電容器會受含有碳化氫鹵素容劑之侵蝕,下列為各種安全與不安全之清潔劑,為避免不必要的損失,您所使用有關印刷基板之清潔劑名請事先告知本公司.

Safe 安全	**Unsafe 不安全**
Methanol **甲醇**	**1.1.2- trichloroethane** **1.1.2- 三氯乙烷**
Ethanol **乙醇**	**Tetrachloroethylene** **四氯化碳**
Propanol **丙醇**	**Chloroform(colorless volatilizable liquid)** **哥羅仿(無色揮發性液體)**
Butanol **丁醇**	**Dichloromethane** **二氯甲烷**
Detergent **去垢劑**	**Trichlorelethylene** **三氯甲烯**
	Dimethybenxene **二甲苯**

V-Chip Aluminum Electrolytic Capacitors

Structure and materials

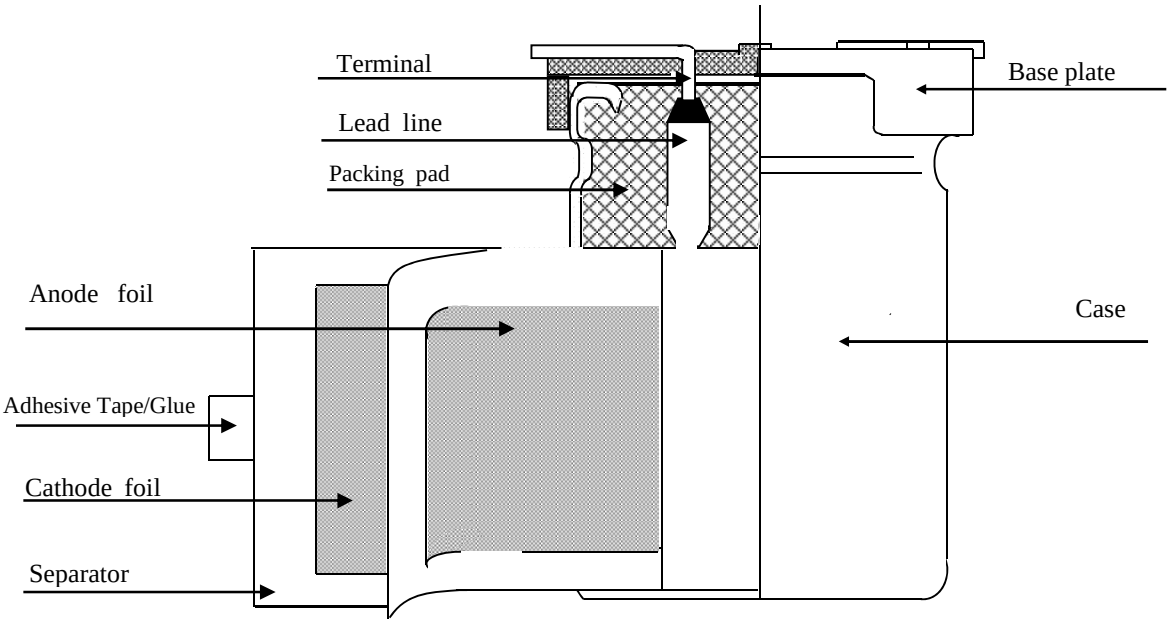

V-Chip type capacitors component

Part name	Materials
Terminal	Tinned copper-ply wire
Lead line	Aluminum 99.92%
Packing pad	Synthetic rubber
Anode Foil	Formed aluminum 99.9% over
Cathode Foil	Formed aluminum 98.4% over
Separator	Manila Espartos
Adhesive Tape/Glue	Phenylene Sulfide ;Glue:PVA
Base plate	Polyphenylene oxide;Glass fibre
Case	Aluminum 99.5%+PU coating

6. PRECAUTIONS AND GUIDELINES TO USERS

When using aluminum elelctrolytic capacitors, pay strict attention to the following:

1. Electrolytic capacitors for DC application require polarization.

Confirm the polarity. If uesd in reversed polarity, the circuit life may be shortened or the capacitor may be damaged. For use on circuits whose polarity is occasionally reversed, or whose polarity is unknown, use bi-polarized capacitors(BP-series). Also, note that the electrolytic capacitor cannot be used for AC application.

2. Do not apply a voltage exceeding the capacitor's voltage rating.

If a voltage exceeding the capacitor's voltage rating is applied, the capacitor may be damaged as leakage current increases. When using the capacitor with AC voltage superimposed on DC voltage, care must be exercised that the peak value of AC voltage does not exceed the rated voltage.

3. Do not allow excessive ripple current to pass.

Use the electrolytic capacitor at current values within the permissible ripple range. If the ripple current exceeds the specified value, request capacitors for high ripple current applications.

4. Ascertain the operating temperature range.

Use the electrolytic capacitors according to the specified operating temperature range. Usage at room temperature will ensure longer life.

5. The electrolytic capacitor is not suitable for circuits in which charge and discharge are frequently repeated.

If used in circuits in which charge and discharge are frequently repeated, the capacitance value may drop, or the capacitor may be damaged. Please consult our engineering department for assistance in these applications.

If the electrolytic capacitor is allowed to stand for a long time, its withstand voltage is liable to drop, resulting in increased leakage current. If the rated voltage is applied to such a product, a large leakage current occurs and this generates internal heat, which damaged the capacitor. If the electrolytic capacitor is allowed to stand for a long time, therefore, use it after giving voltage treatment (Note1). (However, no volgae treatment is required if the electrolytic capacitor is allowed to guarantee 2 years at normal temperature.)

6. Be careful of temperature and time when soldering.

When soldering a printed circuit board with various components, care must be taken that the soldering temperature is not too high and that the dipping time is not too long. Other wise, there will be adverse effects on the electrical characteristics and insulation sleeve of electrolytic capacitors in the case of small-sized electrolytic capacitors, nothing abnormal will occur if dipping is performed at less than 260 ℃ for less than 10 seconds.

7. Do not place a soldering iron body of the capacitor.

The electrolytic capacitor is covered with a vinyl sleeve. If the soldering iron comes in contact with the electrolytic capacitor body during wiring, damage to the vinyl sleeve and/or case may result in defective insulation, or improper protection

8. Cleaning circuit boards after soldering.

Some solvents have adverse effects on capacitors.

Please refer to the next page.

9. Do not apply excessive force to the lead wires or terminals.

If excessive force is applied to the lead wires and terminals, they may be broken or their connections with the internal elements may be affected. (For strength of terminals, refer to JIS C5101-1, JIS C5101-4)

10. Care should be used in selecting a storage area.

If electrolytic capacitors are exposed to high temperatures caused by such things as direct sunlight, the life of the capacitor may be adversely affected. Storage in a high humidity atmosphere may affect the solderability of lead wires and terminals.

11. Surge voltage:

Rated surge voltage shall be applied for 30 seconds and then shall be applied with discharge,for 330 seconds at room temperature .This cycle shall be repeated for 1000 cycles;Duration of one cycle is 6 minutes ;then to judge capacitor's characteristics and appearance.

Rated Voltage(WV)	6.3	10	16	25	35	50	63	80	100
Surge Voltage(SV)	7.2	11.5	18.4	28.8	40.3	57.5	72.5	92	115

For methods of testing, refer to JIS C 5101-1, JIS C 5101-4.

※ The above mentioned material according to EIAJRCR-2367B (issued in March, 2002), titled "Guideline of notabilia for aluminum electrolytic capacitors for use in electronic equipment". Prease refer to the book for details.

Su'scon *CAPACITORS PACKING INFORMATION*

● V-CHIP REEL

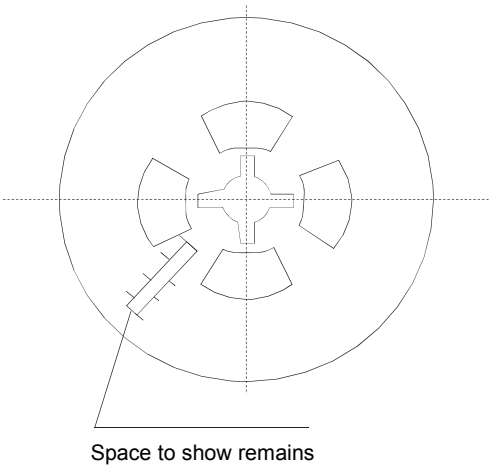

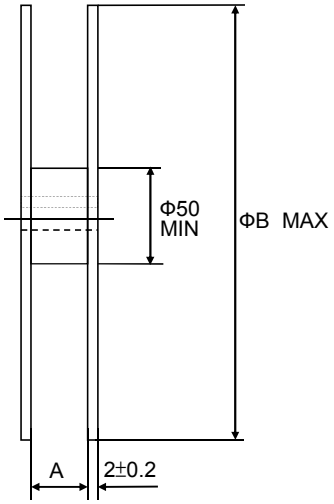

Package Quantity	
Size(Φ×L)	Q'ty/reel
Φ4	2000pcs
Φ5	1000pcs
Φ6.3,8×6.5	1000pcs
Φ8× (10~11)	500pcs
Φ10× (6~11)	500pcs
Φ10× (12~14)	400pcs
Φ12.5 × (13~14)	250pcs
Φ12.5 ×16	200pcs
Φ16× (16~18)	200pcs

(單位：mm)

Size	ϕ 4~5	ϕ 6.3	ϕ 8	ϕ 10	ϕ 12.5	ϕ 16
A	14	18	26	26	34	46
B	382	382	382	382	382	382

■ V-CHIP PACKAGE

●Carrier tape

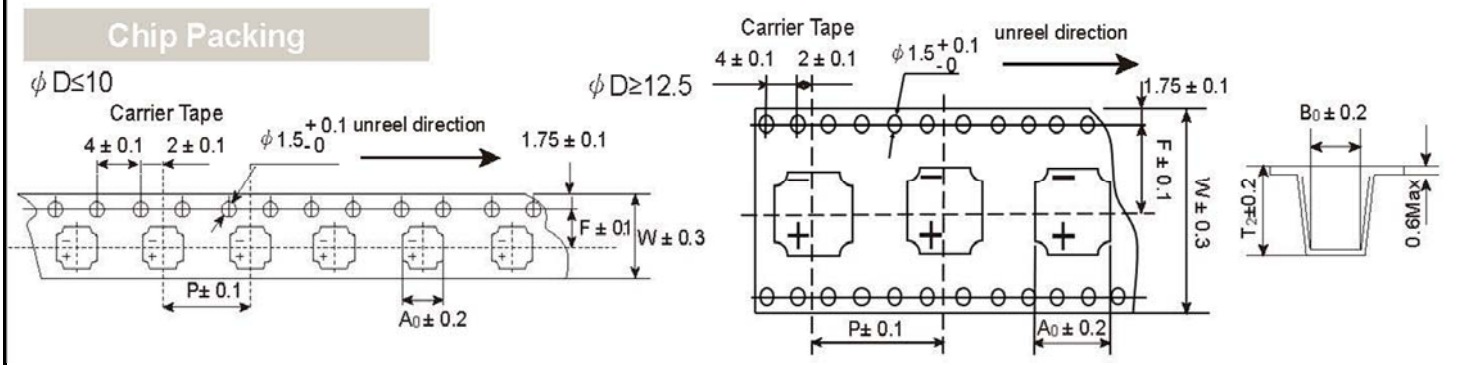

(單位：mm)

Size (Φ×L)	Item					
	W	P	F	A	B_o	T_2
4 × 5.4	12.0	8.0	5.5	5.0	5.0	5.8
5 × 5.4	12.0	12.0	5.5	6.0	6.0	5.8
6.3 × 4.5	16.0	12.0	7.5	7.0	7.0	4.8
6.3 × 5.4	16.0	12.0	7.5	7.0	7.0	5.8
6.3 × 6.0	16.0	12.0	7.5	7.0	7.0	6.5
6.3 × 7.7	16.0	12.0	7.5	7.0	7.0	8.2
8 × 6.5	16.0	12.0	7.5	8.7	8.7	6.8
8 × 10	24.0	16.0	11.5	8.7	8.7	11.0
10 × 10	24.0	16.0	11.5	10.7	10.7	11.0
10 × 12.5	24.0	16.0	11.5	10.7	10.7	13.0
12.5 × 13.5	32.0	24.0	14.2	13.4/13.7(G)	13.4/13.7(G)	15.0
12.5 × 16	32.00	24.00	14.20	13.40	13.40	17.50
16× 16.5	44.0	28.0	20.2	17.5	17.5	17.5

(G)" "Anti-vibration Structure"