福声科技
FUSHENG TECHNOLOGY

ROHS

SPECIFICATION OF PRODUCT

承 认 书

CUSTOMER: _____

DESCRIPTION: SMD Piezo Buzzer

FUSHENG P/N: FUET-1230B

CUSTOMER P/N: _____

DATE: 2023-9-18

CUSTOMER	APPROVER	CHECKER
	Cui	Bing Yan

泰州福声电子科技有限公司

地址:江苏省泰州市海陵区凤凰西路 98 号

电话：0523-86219066传真：0086-523-81601108

邮箱: fs.wu@electronic-tech.cn

网址：www.tzfsdz.com



1.SPECIFICATION 规格

No.	Item	Unit	Specification	Condition
1	Oscillation Frequency	Hz	4000±300	square wave
2	Operating Voltage	VDC	2~5.5	
3	Rated Voltage	VDC	3	
4	Current Consumption	mA	MAX.3	at Rated Voltage
5	Sound Pressure Level	dB	MIN. 85	at 10cm at Rated Voltage
6	Tone		Constant	
7	Operating Temperature	℃	-20 ~ +85	
8	Storage Temperature	℃	-30 ~ +90	
9	Dimension	mm	12×12×H3.0	See appearance drawing
10	Weight (MAX)	gram	0.4	
11	Housing Material		LCP(Black)	
12	Leading Pin		Tin Plated Brass(Sn	See appearance drawing
13	Environmental Protection Regulation		RoHS	

2. APPEARANCE DRAWING 尺寸图

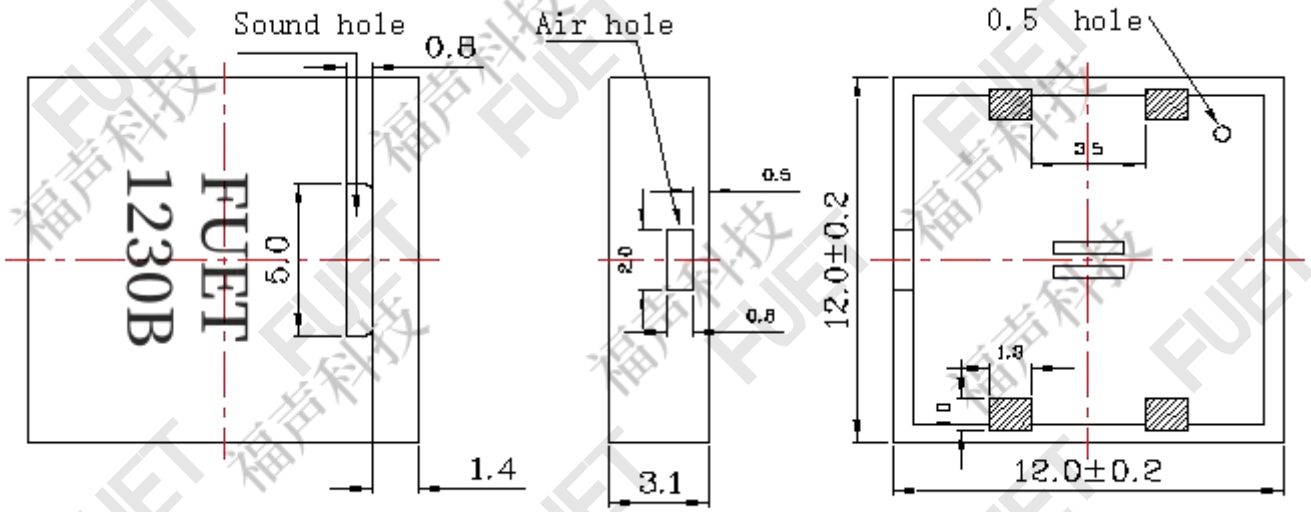

TOI:±0.3 Unit : mm

有源 SMD 压电式蜂鸣器

■概要

DC1230 有源 SMD 压电式蜂鸣器是我司自主研发的创新产品，相较于传统无源 SMD 压电式蜂鸣器内置了专用驱动 IC，驱动电压 Vp-p=2*VDD，使得蜂鸣器输出声压有效提升 3-5dB。该蜂鸣器外部增加了 CH 选择端和 DIN 外部信号输入端，可实现关断休眠、连续音、断续音或跟随 DIN 端输入信号发声 4 种工作模式。关断模式下，静态电流≤1uA。CH 选择端和 DIN 端直接与单片机的 I/O 口连接，为终端客户减少了外部使用元件，最大程度的节省 PCB 板面积，为高密度安装进一步创造了条件。

■应用

个人便携式防护产品、健康医疗、仪器仪表、智能家居、汽车、物联网等

■性能特性

工作电压：VDD=2-5.5V；

内置驱动 IC，实际驱动电压 Vp-p=2*VDD

蜂鸣器工作电流 MAX：3mA @ VDD=3V；

静态电流：≤1uA；

固定发声频率：4100Hz±1.5%；

声压 MIN：85dB/10cm @ VDD=3V；

具有 CH 选择端和 DIN 信号端，自由切换固定频率输出和外部信号跟随功能；

超小体积：12*12*3mm

■ 引脚定义及电气符号

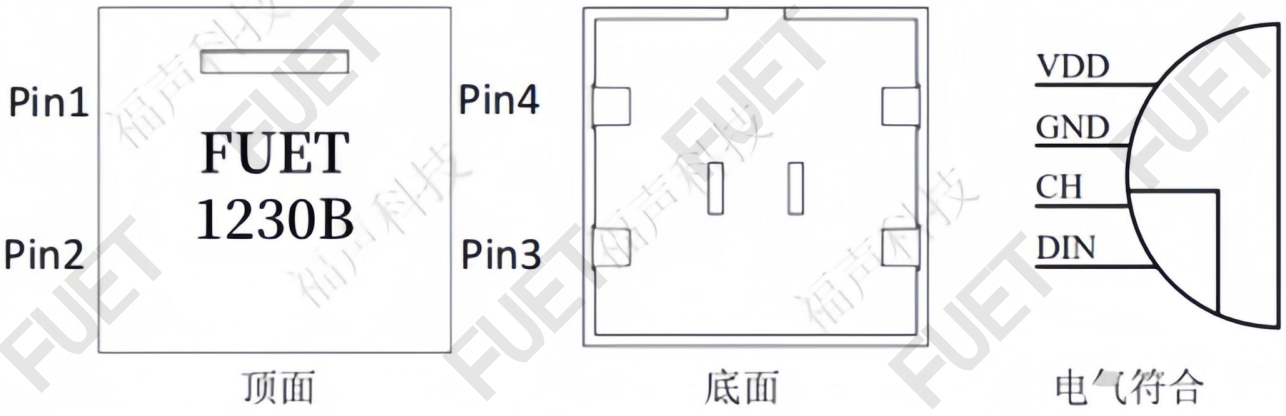

脚位	符号	功能	脚位	符号	功能
Pin1	DIN	信号输入端	Pin3	GND	地
Pin2	VDD	电源	Pin4	CH	选择端

■ 输出状态设置

CH 端	DIN 端	输出状态
0	0	关断，不发声
0	f	跟随 DIN 端信号 f 发声
1	任意接电源或地	内部固定频率发声

3.TESTING METHOD 测量方式

Standard Measurement conditions

Temperature:25±2℃ Humidity:45-65%

Acoustic Characteristics:

The oscillation frequency, current consumption and sound pressure are measured by the measuring instruments shown below.

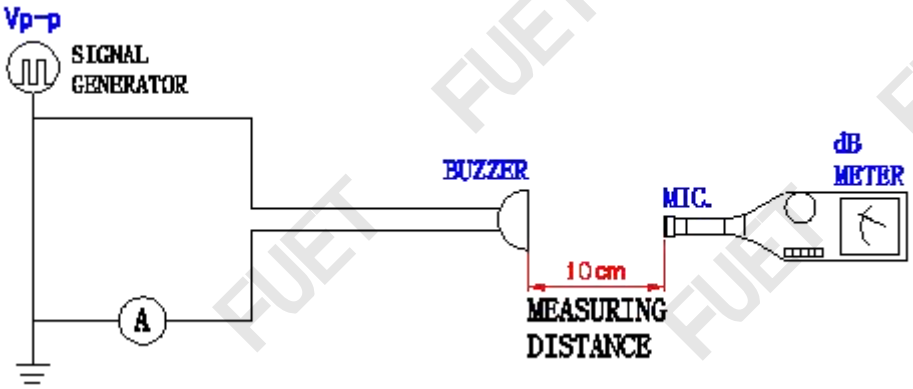

In the measuring test, buzzer is placed as follows:

■DIN 频率输入、声压曲线（VDD=3V，@10cm 测试）



■ 应用电路一

信号端 DIN 接地，选择端 CH 接高电平，蜂鸣器发 4.1KHz 长音；选择端 CH 接低 频信号，蜂鸣器发滴滴声。

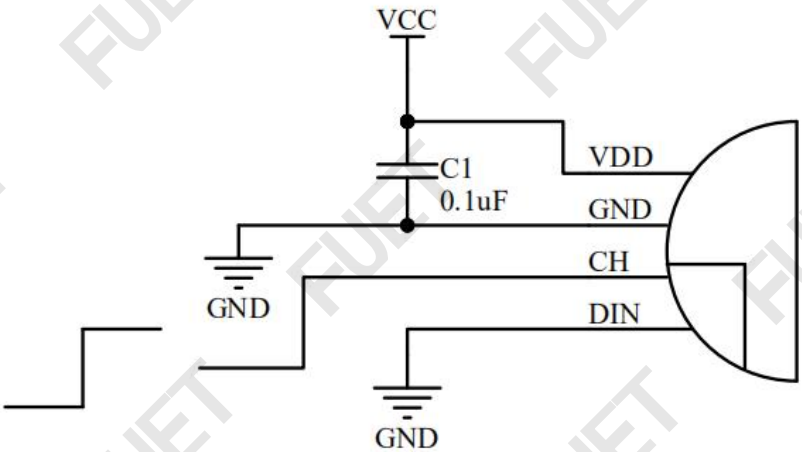

■应用电路二

选择端 CH 接地，信号端 DIN 接外部信号，蜂鸣器跟随外部信号发声。

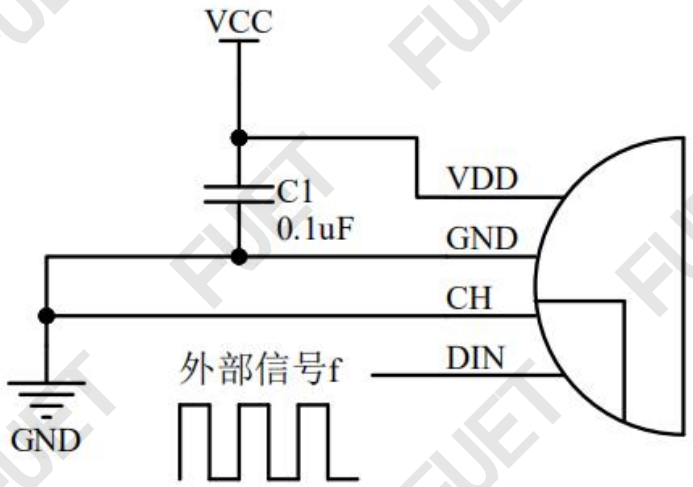

注：

1、应用工程师们可以将 MCU 的 I/O 口直接与蜂鸣器选择端 CH 和信号端 DIN 连接，使蜂鸣器发出长音、断续音或跟随 DIN 端输入信号发声。I/O 口同时输出低电平，蜂鸣器停止发声且芯片输出关断，静态电流≤1uA；

4. Typical Frequency Response Curve

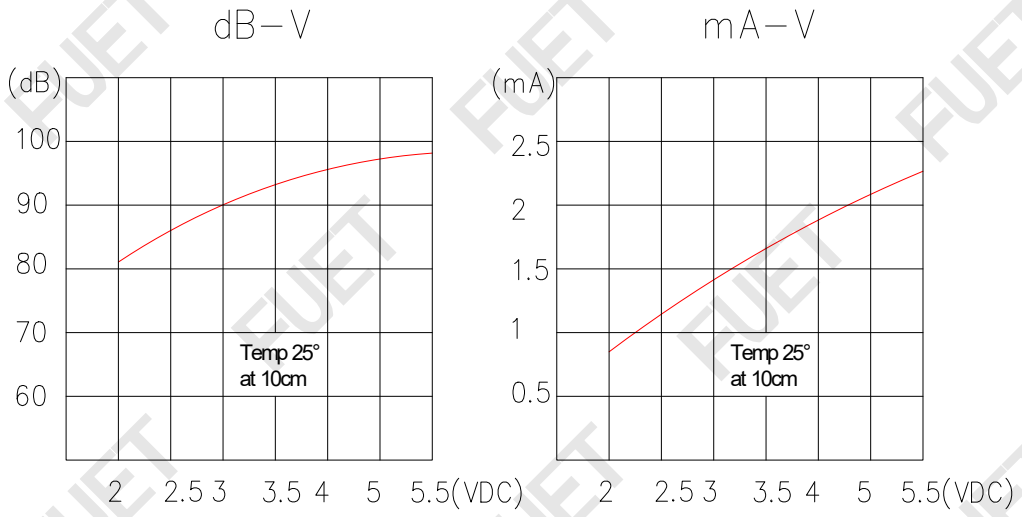

5.Soldering Condition

(1)Recommendable reflow soldering condition is as follows
(Reflow soldering is twice)
Note:It is requested that reflow soldering should be executed after heat of product goes down to normal.

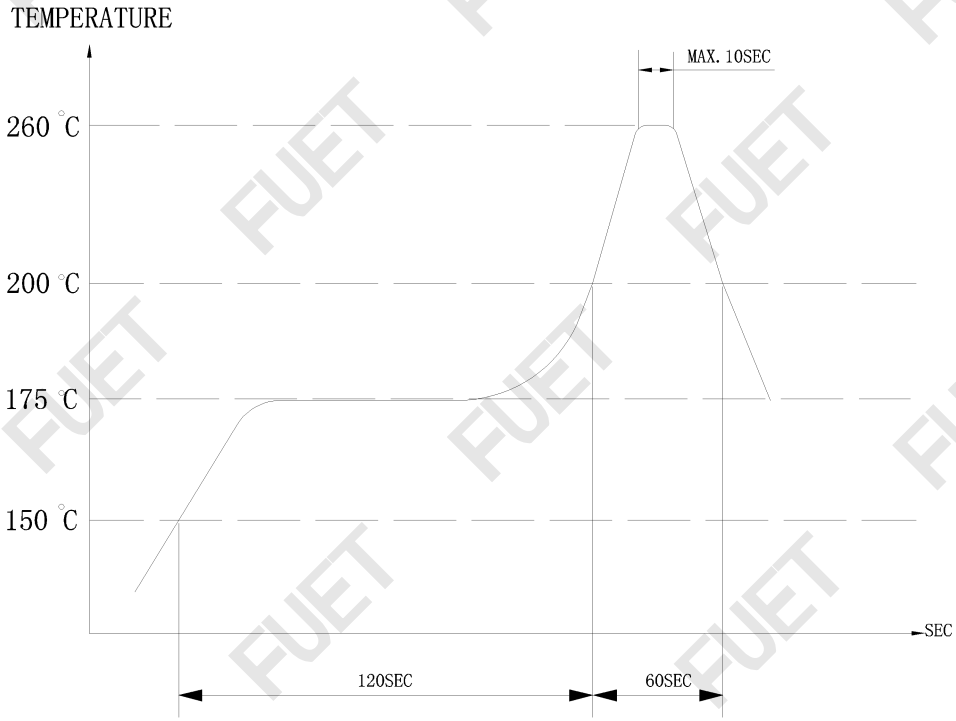

Heat resistant line
(Used when heat resistant reliability test is performed)
(2)Manual soldering
Manual soldering temperature 350 ºC within 5 sec.

6. RELIABILITY TEST

NO.	ITEM	TEST CONDITION AND REQUIREMENT
1	High Temperature Test (Storage)	After being placed in a chamber with 90ð 2ºC for 96 hours and then being placed in normal condition for 2 hours. Allowable variation of SPL after test: ð 10dB.
2	Low Temperature Test (Storage)	After being Placed in a chamber with -30ð 2ºC for 96 hours and then being placed in normal condition for 2 hours. Allowable variation of SPL after test: ð 10dB.
3	Humidity Test	After being Placed in a chamber with 90-95% R.H. at 40ð 2ºC for 96 hours and then being placed in normal condition for 2 hours. Allowable variation of SPL after test: ð 10dB.
4	Temperature Cycle Test	The part shall be subjected to 5 cycles. One cycle shall be consist of: 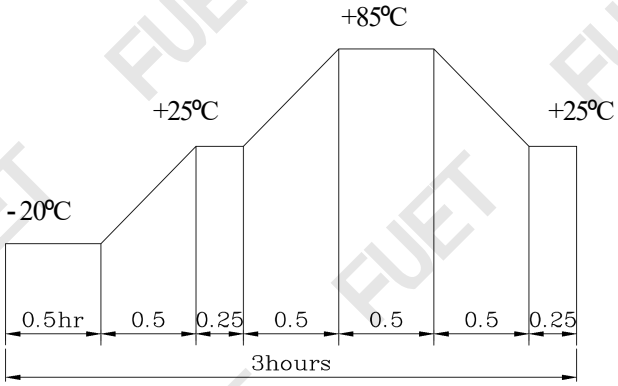 Allowable variation of SPL after test: ð 10dB.
5	Drop Test	Drop on a hard wood board of 4cm thick, any directions ,6 times, at the height of 75cm . Allowable variation of SPL after test: ð 10dB.
6	Vibration Test	After being applied vibration of amplitude of 1.5mm with 10 to 55 Hz band of vibration frequency to each of 3 perpendicular directions for 2 hours . Allowable variation of SPL after test: ð 10dB.
7	Solderability Test	Lead terminals are immersed in rosin for 5 seconds and then immersed in solder bath of +300ð 5ºC for 3ð 1 seconds . 90% min. lead terminals shall be wet with solder (Except the edge of terminals).
8	Terminal Strength Pulling Test	The force of 9.8N(1.0kg) is applied to each terminal in axial direction for 10 seconds. No visible damage and cutting off.

TEST CONDITION.

Standard Test Condition	:	a) Temperature : +5 ~ +35℃	b) Humidity : 45-85%	c) Pressure : 860-1060mbar
一般测试条件	:	a) 温度 : +5 ~ +35℃	b) 湿度 : 45-85%	c) 气压 : 860-1060mbar
Judgment Test Condition	:	a) Temperature : +25 ± 2℃	b) Humidity : 60-70%	c) Pressure : 860-1060mbar
争议时测试条件	:	a) 温度 : +25 ± 2℃	b) 湿度 : 60-70%	c) 气压 : 860-1060mbar

7. PACKING STANDARD

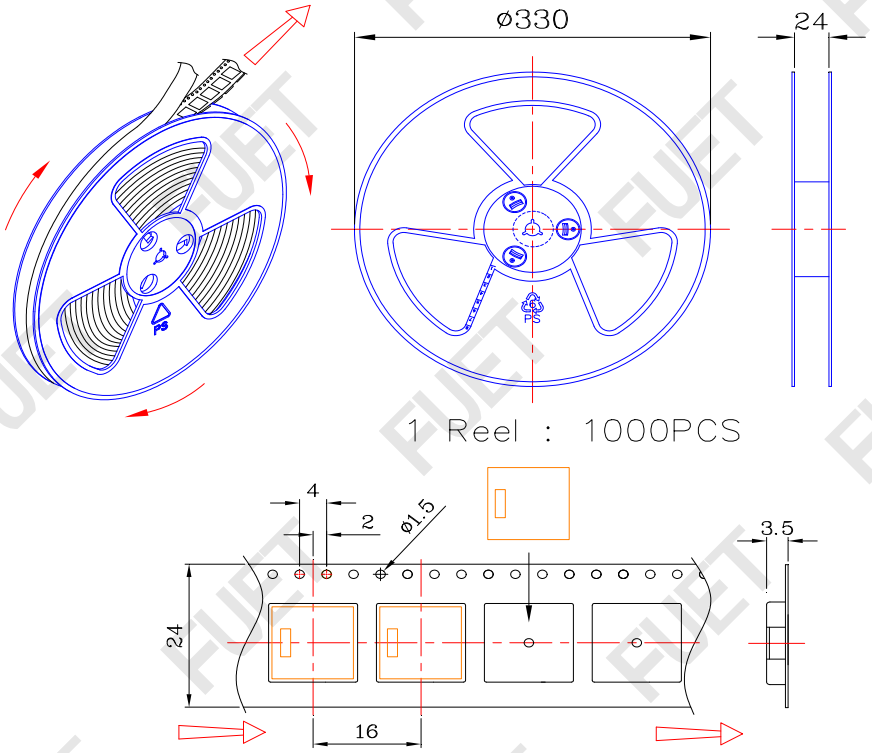

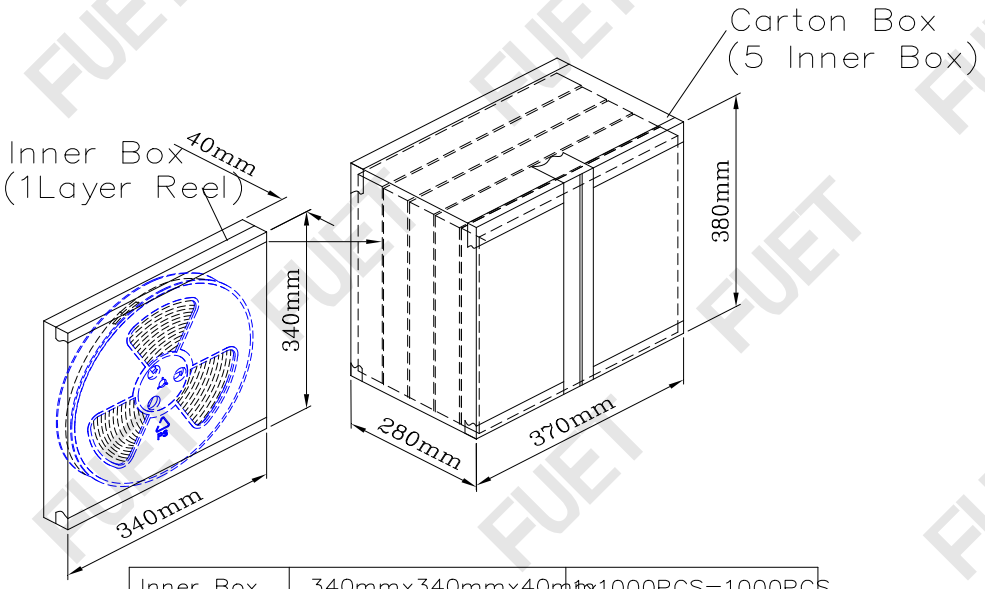

Inner Box	340mmx340mmx40mm	1x1000PCS=1000PCS
Carton Box	380mmx370mmx280mm	5x1000PCS=5,000PCS