REVISIONS					
REV.	ECN NO.	LOCATION	DESCRIPTION	DATE	DESIGN
A1	N/A		INITIAL RELEASE	2024.07.13	阿 树

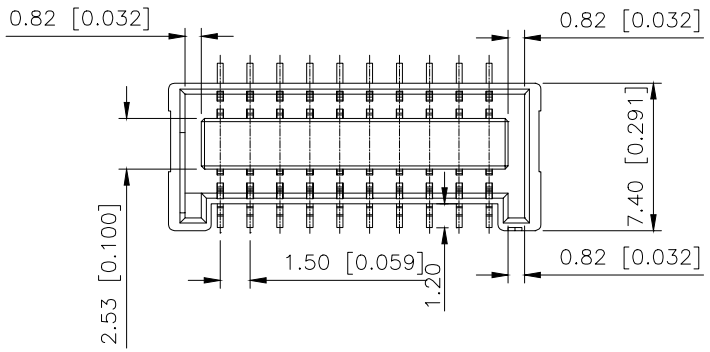

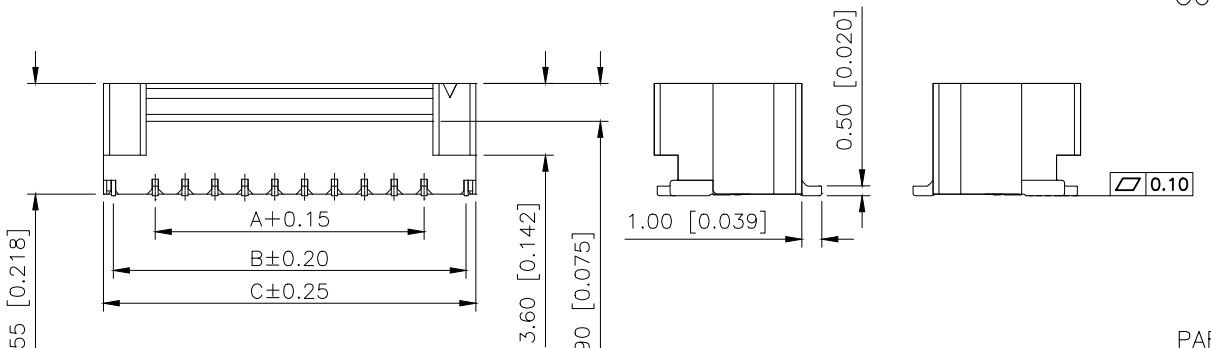

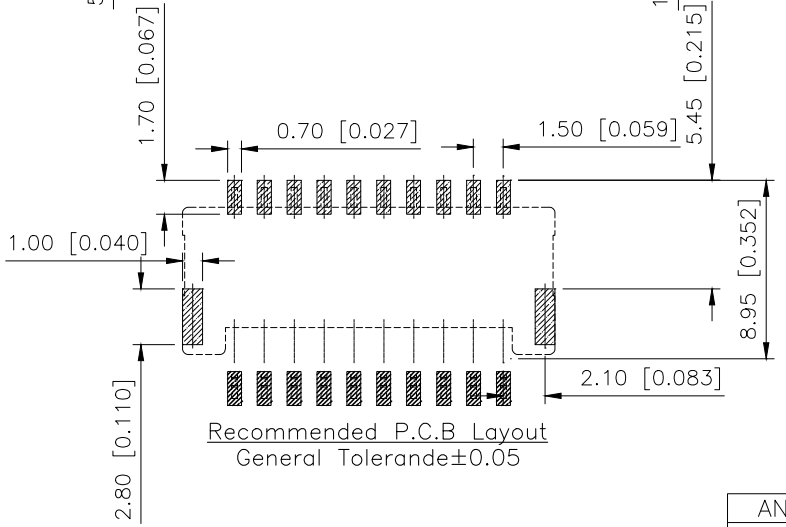

Recommended P.C.B Layout
General Tolerande±0.05

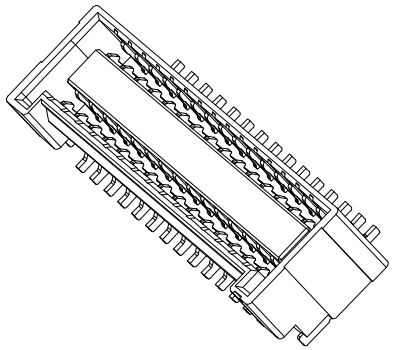

■SPECIFICATIONS
- •Voltage rating:100V AC,DC
- •Current rating:2.0A,AC,DC
- •Withstanding Voltage:500V AC/minute
- •Insulation resistance:500MΩ min
- •Temperature range:−45°C+95°C
- •Contact resistance:40mΩ max

PART NO.:

X1501 W V S−2x07−LP SN
① ② ③ ④ ⑤ ⑥ ⑦

① Series No
② Category:W−Wafer
③ Welding Board Angle:V−Straight 180°
④ Welding Way:S−SMT
⑤ Row No−Pin：XX−05P~20P
⑥ Material:LP−LCP UL94V−0(Gray)
⑦ Plating：SN−Plated Tin

Poles	Dimension mn		
	A	B	C
2x05	6.00	10.20	11.20
2x06	7.50	11.70	12.70
2x07	9.00	13.20	14.20
2x08	10.5	14.70	15.70
2.09	12.0	16.20	17.20
2x10	13.5	17.70	18.70
2x11	15.0	19.20	20.20
2x12	16.5	20.70	21.70
2x13	18.0	22.20	23.20
2x14	19.5	23.70	24.70
2x15	21.0	25.20	26.20
2x16	22.5	26.70	27.70
2x17	24.0	28,20	29.20
2x18	25.5	29.70	30.70
2x19	27.0	31.20	32.20
2x20	28.5	32.70	33.70

X1501WVS−2x07−LPSN	LCP	Brass	X1501H
PART NO	Material	Material (pin)	Suitable XKB Housing

ANGLAR	±5°
X.	±0.40
X.x	±0.30
X.xx	±0.20
X.xxx	±0.15
UNSPECIFIED TOLERANCES	

XKB INDUSTRIAL PRECISION CO.,LIMITED

DESIGN	阿 树	VIEW:	MODEL TYPE: 1.5mm Crimp Style Connector
CHECKED		UNIT: mm/in	PART NO.: X1501WVS−2x07−LPSN
APPROVED		SIZE: A4	DWG NO.: X−X1501WVS−2x07−LPSN

SCALE	PAGE	REVISION
N/A	1/1	A1