WGD80P03

Features:

- ☐ Advanced Trench Technology
- ☐ Ultra Low Gate Charge:Qg=66nC (Typ.)
- ☐ VDSS=-30V, ID=-80A
- ☐ Rds(on):5.4mΩ(Typ.) @VG=-10V
- ☐ 100% Avalanche Tested

TO-252

RoHS COMPLIANT

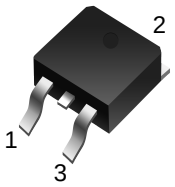

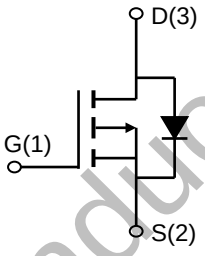

1.Gate (G)
2.Drain (D)
3.Source (S)

Absolute Maximum Ratings (@ T_C = 25°C unless otherwise specified)

Symbol	Parameter		Value	Unit
V_{DS}	Drain-to-Source Voltage		-30	V
V_{GS}	Gate-to-Source Voltage		±20	V
I_D	Continuous Drain Current	T_C = 25°C	-80	A
		T_C = 100°C	-35	
I_{DM}	Pulsed Drain Current (1)		Refer to Fig.4	A
E_{AS}	Single Pulsed Avalanche Energy (2)		133	mJ
P_D	Power Dissipation	T_C = 25°C	35	W
		T_C = 100°C	15	
T_J, T_{STG}	Junction & Storage Temperature Range		-55 to 150	°C

Thermal Characteristics

Symbol	Parameter	Max	Unit
$R_{\theta JA}$	Thermal Resistance, Junction to Ambient(3)	41	°C/W
$R_{\theta JC}$	Thermal Resistance, Junction to Case	4.2	

WildGoose Semiconductor

Electrical Characteristics (T_J = 25°C unless otherwise specified)

Symbol	Parameter	Conditions	Min.	Typ.	Max.	Unit
Off Characteristics						
$V_{(BR)DSS}$	Drain-Source Breakdown Voltage	I_D = -250μA, V_{GS} = 0V	-30	-	-	V
I_{DSS}	Zero Gate Voltage Drain Current	V_{DS} = -30V, V_{GS} = 0V	-	-	-1.0	μA
I_{GSS}	Gate-Body Leakage Current	V_{DS} = 0V, V_{GS} = ±20V	-	-	±100	nA
On Characteristics						
$V_{GS(th)}$	Gate Threshold Voltage	V_{DS} = V_{GS}, I_D = -250μA	-1.0	-1.6	-2.5	V
$R_{DS(ON)}$	Static Drain-Source ON-Resistance(4)	V_{GS} = -10V, I_D = -30A	-	5.4	7.0	mΩ
		V_{GS} = -4.5V, I_D = -20A	-	7.2	10	mΩ
Dynamic Characteristics						
R_g	Gate Resistance	f = 1MHz	-	6	-	Ω
C_{iss}	Input Capacitance	V_{GS} = 0V, V_{DS} = -15V, f = 1MHz	2405	3688	4545	pF
C_{oss}	Output Capacitance		336	400	635	pF
C_{rss}	Reverse Transfer Capacitance		232	355	438	pF
Q_g	Total Gate Charge	V_{GS} = 0 to -10V, V_{DS} = -15V, I_D = -10A	42	66	80	nC
Q_{gs}	Gate Source Charge		-	9.5	-	nC
Q_{gd}	Gate Drain("Miller") Charge		10	14	19	nC
Switching Characteristics						
$t_{d(on)}$	Turn-On DelayTime	V_{GS} = -10V, V_{DD} = -15V, I_D= -10A, R_{GEN} = 2.7Ω	-	6.8	-	ns
t_r	Turn-On Rise Time		-	5.7	-	ns
$t_{d(off)}$	Turn-Off DelayTime		-	112	-	ns
t_f	Turn-Off Fall Time		-	78	-	ns
Body Diode Characteristics						
I_S	Maximum Continuous Body Diode Forward Current		-	-	-80	A
I_{SM}	Maximum Pulsed Body Diode Forward Current		-	-	-202	A
V_{SD}	Body Diode Forward Voltage	V_{GS} = 0V, I_S = -20A	-		-1.2	V
trr	Body Diode Reverse Recovery Time	I_F = -10A, di/dt = 100A/us	15	21	29	ns
Qrr	Body Diode Reverse Recovery Charge		-	9.8	-	nC

Notes: 1. Repetitive Rating: Pulse Width Limited by Maximum Junction Temperature.

2. E_{AS} condition: Starting T_J=25C, V_{DD}=-15V, V_{GS}=-10V, R_G=25ohm, L=0.5mH, I_{AS}=-23.1A, V_{DD}=0V during time in avalanche.

3. $R_{\theta JA}$ is measured with the device mounted on a 1inch^2 pad of 2oz copper FR4 PCB.

4. Pulse Test: Pulse Width≤300μs, Duty Cycle≤0.5%.

Wild Goose Semiconductor

Typical Performance Characteristics

Figure 1: Power De-rating

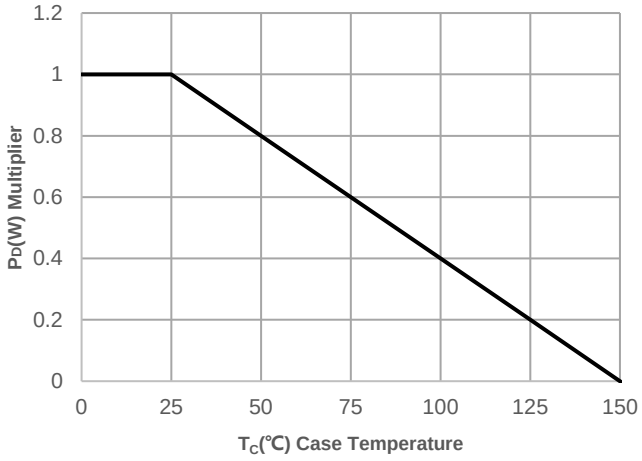

Figure 2: Current De-rating

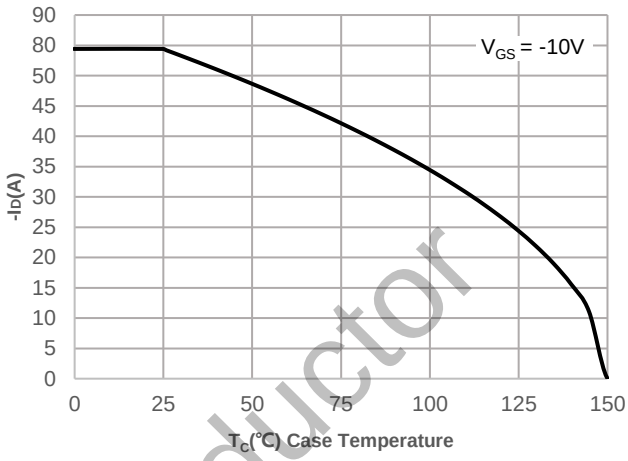

Figure 3: Normalized Maximum Transient Thermal Impedance

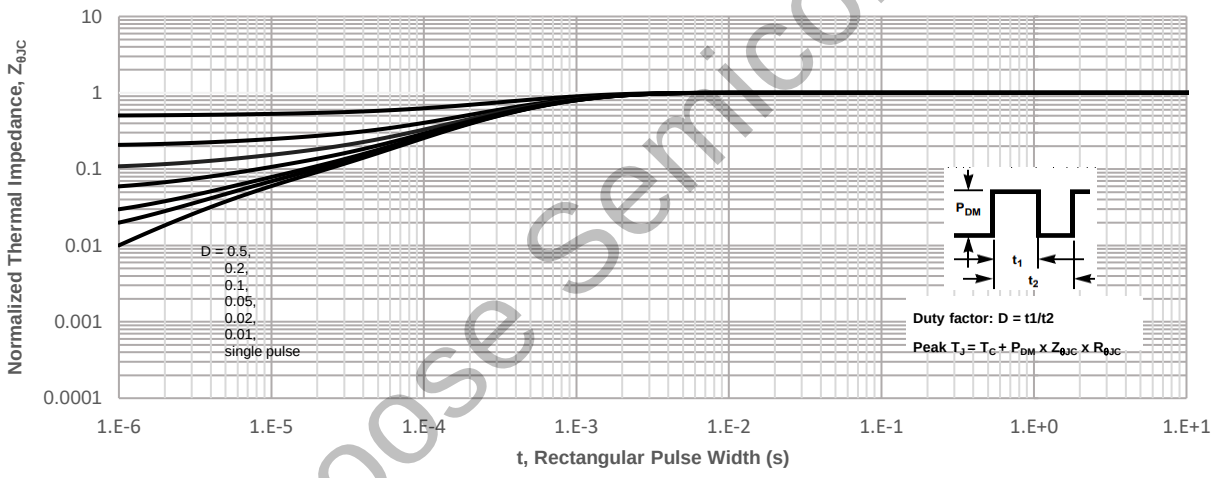

Figure 4: Peak Current Capacity

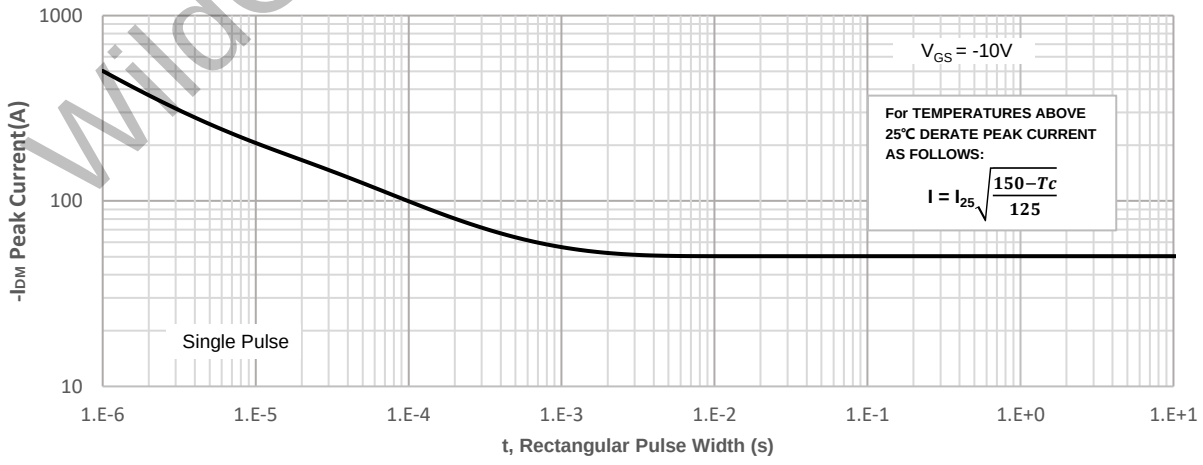

WildGoose Semiconductor

Typical Performance Characteristics

Figure 5: Output Characteristics

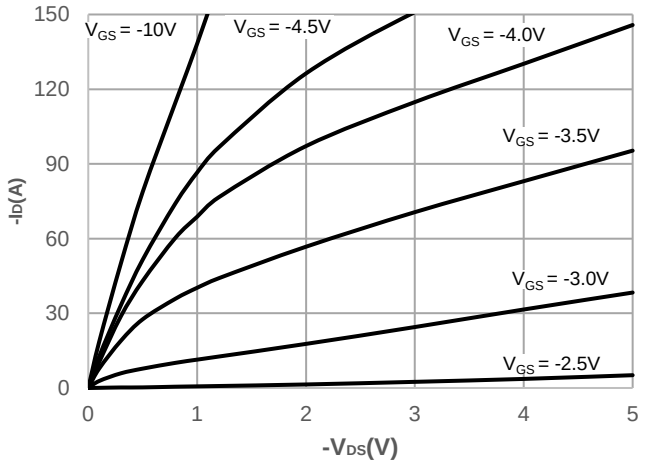

Figure 6: Typical Transfer Characteristics

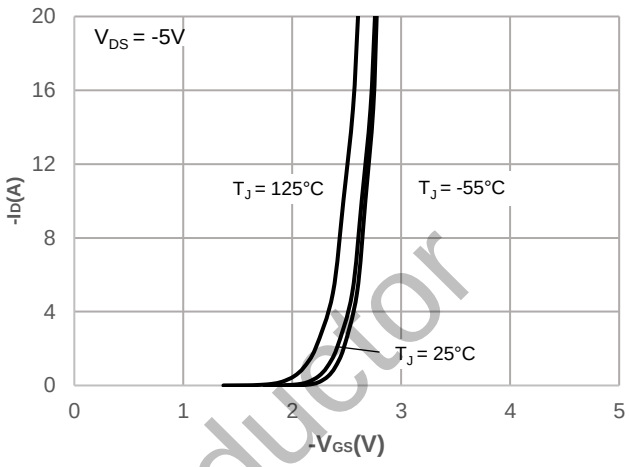

Figure 7: On-resistance vs. Drain Current

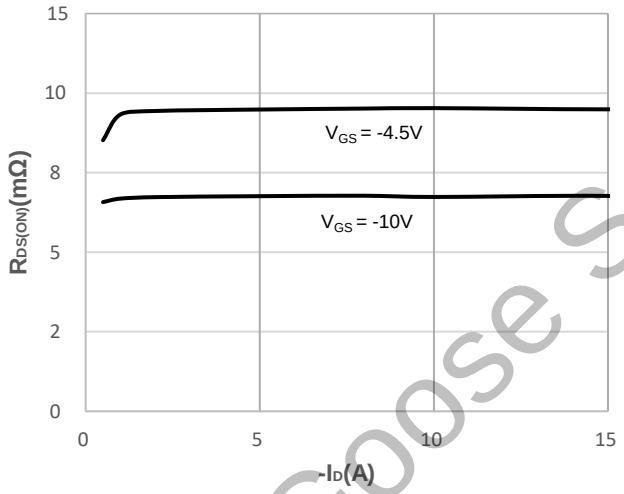

Figure 8: Body Diode Characteristics

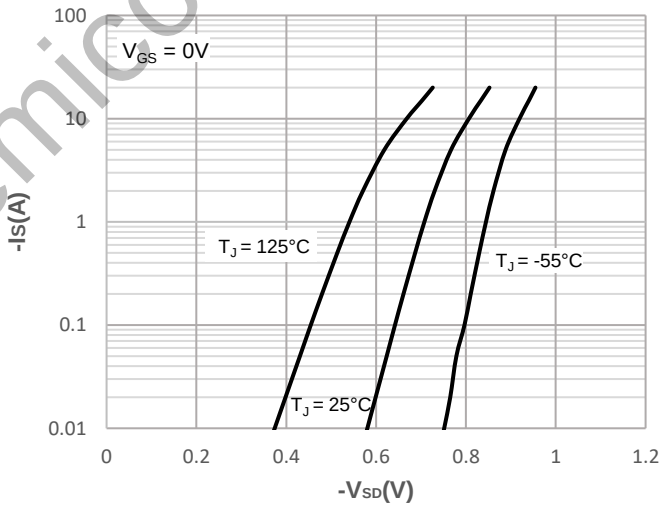

Figure 9: Gate Charge Characteristics

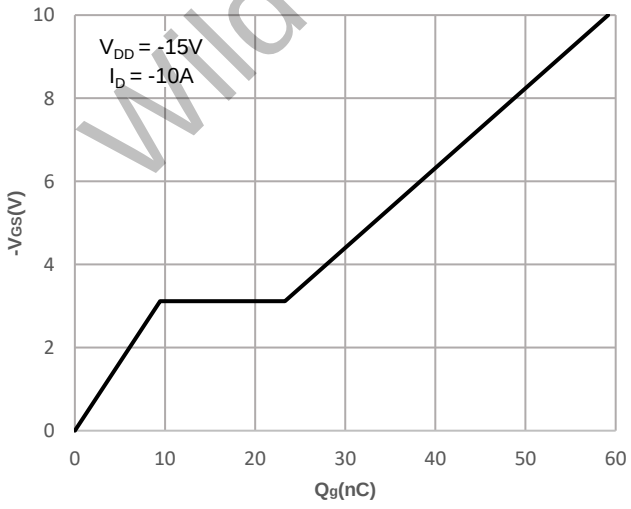

Figure 10: Capacitance Characteristics

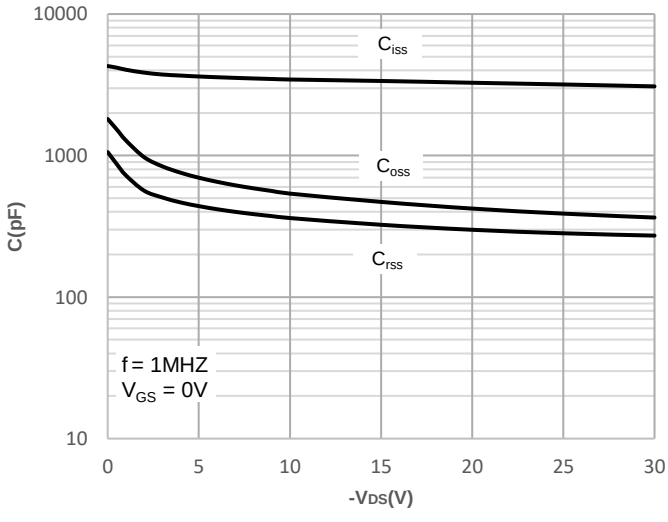

WildGoose Semiconductor

Typical Performance Characteristics

Figure 11: Normalized Breakdown voltage vs. Junction Temperature

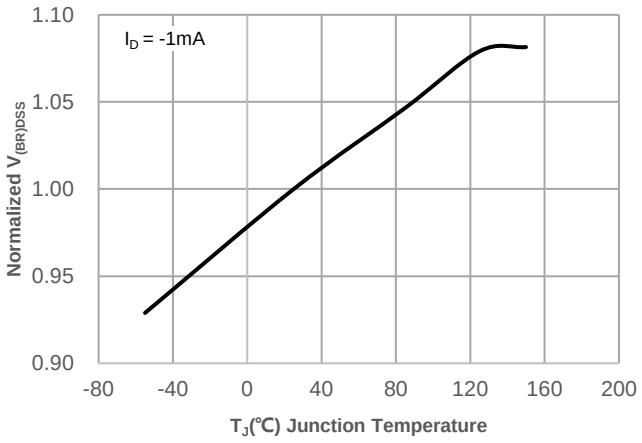

Figure 12: Normalized on Resistance vs. Junction Temperature

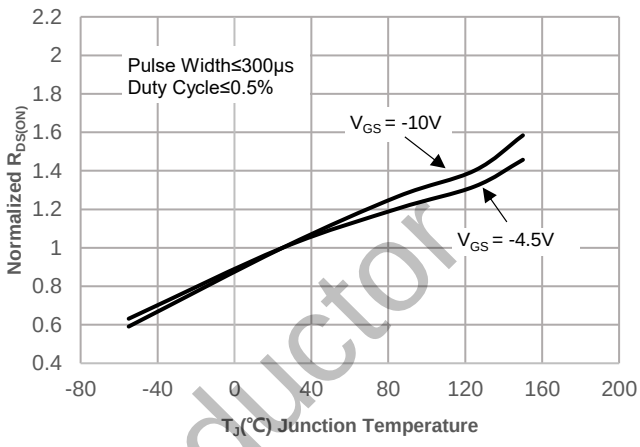

Figure 13: Normalized Threshold Voltage vs. Junction Temperature

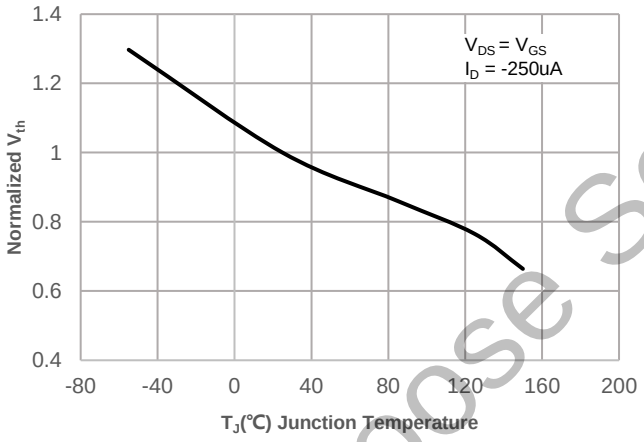

Figure 14: $R_{DS(ON)}$ vs. V_{GS}

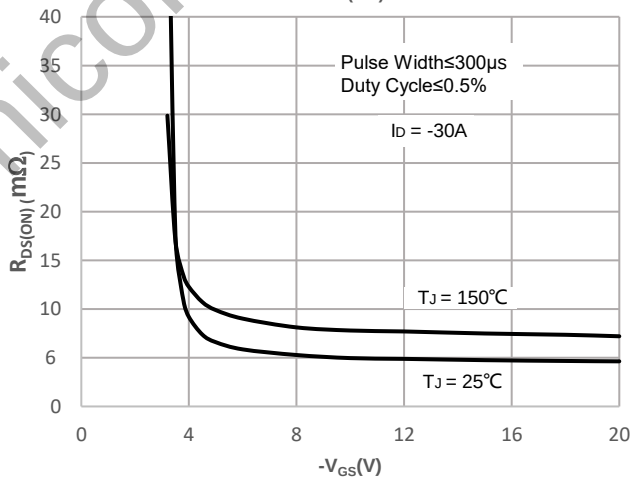

Figure 15: Maximum Safe Operating Area

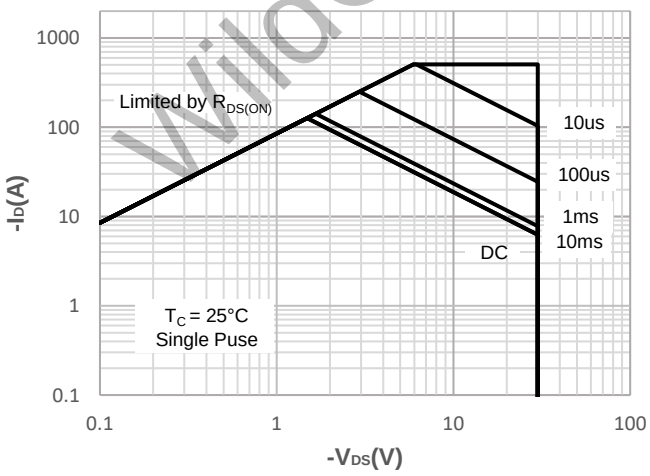

WildGoose Semiconductor

Test Circuit

Gate Charge Test Circuit & Waveform

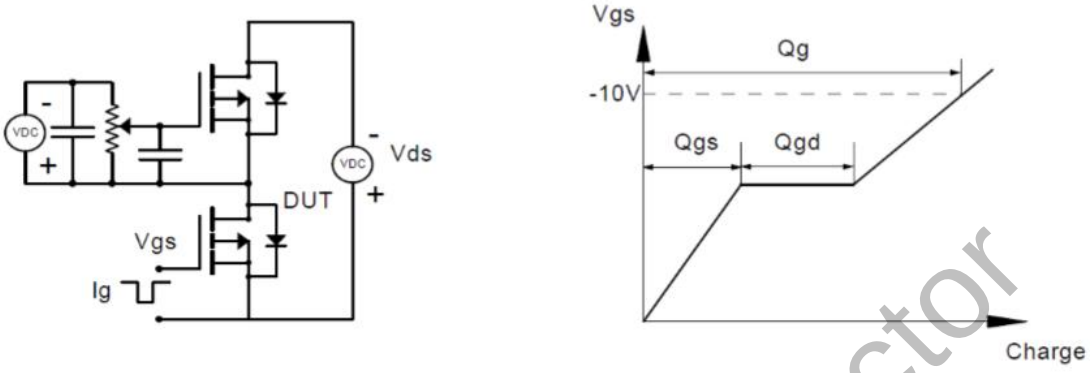

Resistive Switching Test Circuit & Waveforms

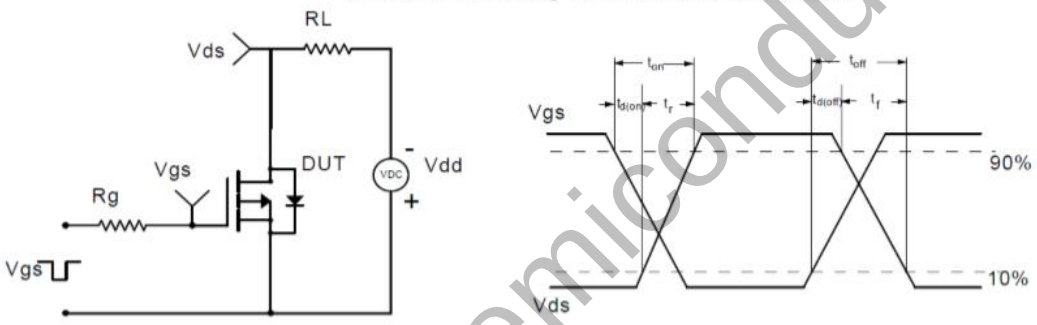

Unclamped Inductive Switching (UIS) Test Circuit & Waveforms

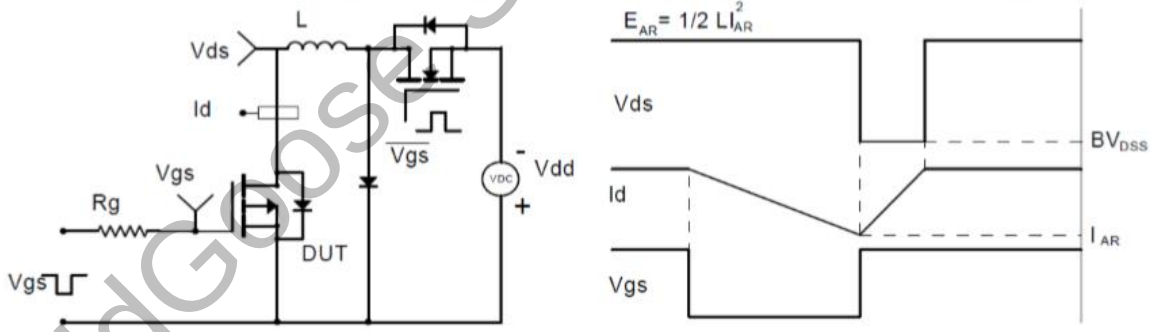

Diode Recovery Test Circuit & Waveforms

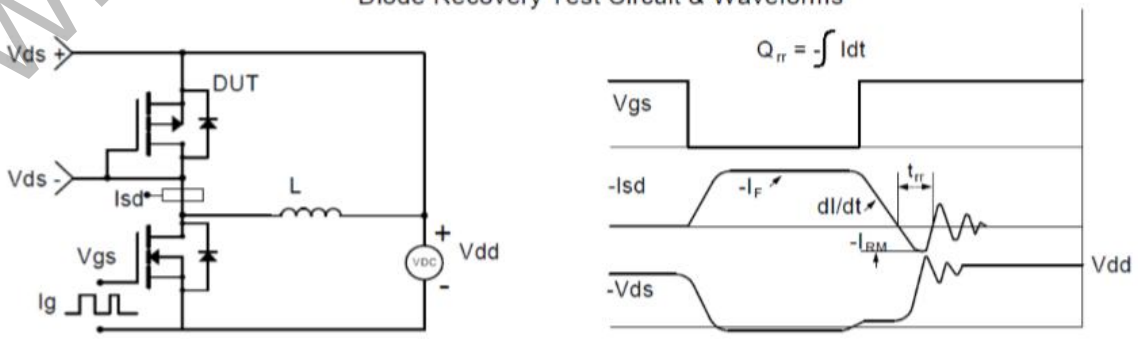

WildGoose Semiconductor

Package Dimension

TO-252

Unit:mm

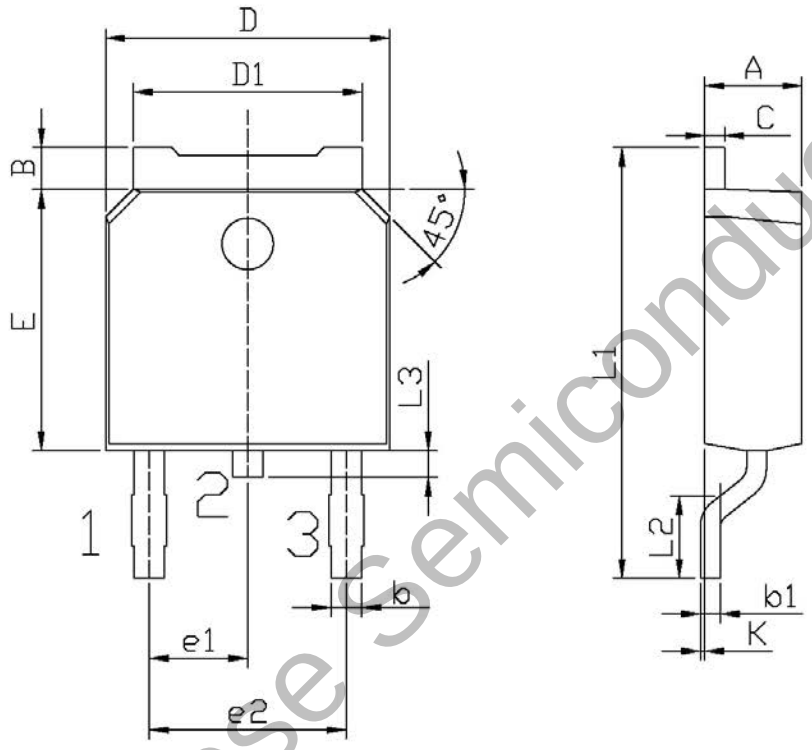

Symbol	Dimensions In Millimeters		Symbol	Dimensions In Millimeters	
	Min	Max		Min	Max
A	2.20	2.40	E	5.95	6.25
B	0.95	1.25	e1	2.24	2.34
b	0.70	0.90	e2	4.43	4.73
b1	0.45	0.55	L1	9.85	10.35
C	0.45	0.55	L2	1.25	1.75
D	6.45	6.75	L3	0.60	0.90
D1	5.20	5.40	K	0.00	0.10

WildGoose Semiconductor