WGEN04V30C

Features:

- ☐ Advanced Trench Technology
- ☐ Excellent Switching Characteristics
- ☐ Extended Safe Operating Area
- ☐ Ultra Low Gate Charge:Qg=45nC (Typ.)
- ☐ VDSS=30V, ID=95A
- ☐ Rds(on):3.4mΩ(Typ.) @VG=10V
- ☐ 100% Avalanche Tested

PDFN3*3

RoHS COMPLIANT



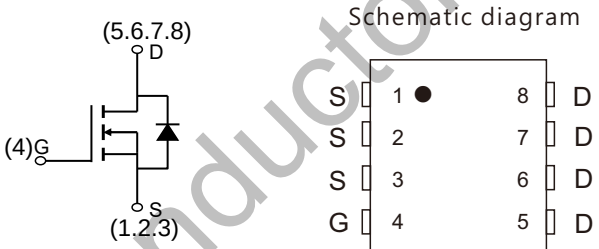

Absolute Maximum Ratings (@ T_C = 25°C unless otherwise specified)

Symbol	Parameter		Value	Unit
V_{DS}	Drain-to-Source Voltage		30	V
V_{GS}	Gate-to-Source Voltage		±20	V
I_D	Continuous Drain Current	T_C = 25°C	95	A
		T_C = 100°C	64	
I_{DM}	Pulsed Drain Current (1)		Refer to Fig.4	A
E_{AS}	Single Pulsed Avalanche Energy (2)		102	mJ
P_D	Power Dissipation	T_C = 25°C	68	W
		T_C = 100°C	32	
T_J, T_{STG}	Junction & Storage Temperature Range		-55 to 150	°C

Thermal Characteristics

Symbol	Parameter	Max	Unit
$R_{\theta JA}$	Thermal Resistance, Junction to Ambient(3)	38	°C/W
$R_{\theta JC}$	Thermal Resistance, Junction to Case	1.85	

WildGoose Semiconductor

Electrical Characteristics (T_J = 25°C unless otherwise specified)

Symbol	Parameter	Conditions	Min.	Typ.	Max.	Unit
Off Characteristics						
$V_{(BR)DSS}$	Drain-Source Breakdown Voltage	I_D = 250μA, V_{GS} = 0V	30	-	-	V
I_{DSS}	Zero Gate Voltage Drain Current	V_{DS} = 30V, V_{GS} = 0V	-	-	1.0	μA
I_{GSS}	Gate-Body Leakage Current	V_{DS} = 0V, V_{GS} = ±20V	-	-	±100	nA
On Characteristics						
$V_{GS(th)}$	Gate Threshold Voltage	V_{DS} = V_{GS}, I_D = 250μA	1.1	1.6	2.1	V
$R_{DS(ON)}$	Static Drain-Source ON-Resistance(4)	V_{GS} = 10V, I_D = 30A	-	3.4	4.4	mΩ
		V_{GS} = 4.5V, I_D = 20A	-	5.0	6.4	mΩ
Dynamic Characteristics						
R_g	Gate Resistance	f = 1MHz	-	2.7	-	Ω
C_{iss}	Input Capacitance	V_{GS} = 0V, V_{DS} = 15V, f = 1MHz	-	2247	-	pF
C_{oss}	Output Capacitance		-	264	-	pF
C_{rss}	Reverse Transfer Capacitance		-	220	-	pF
Q_g	Total Gate Charge	V_{GS} = 0 to 10V, V_{DS} = 15V, I_D = 30A	-	45	-	nC
Q_{gs}	Gate Source Charge		-	8	-	nC
Q_{gd}	Gate Drain("Miller") Charge		-	10	-	nC
Switching Characteristics						
$t_{d(on)}$	Turn-On DelayTime	V_{GS} = 10V, V_{DD} = 15V, I_D= 30A, R_{GEN} = 3Ω	-	8	-	ns
t_r	Turn-On Rise Time		-	16	-	ns
$t_{d(off)}$	Turn-Off DelayTime		-	40	-	ns
t_f	Turn-Off Fall Time		-	13	-	ns
Body Diode Characteristics						
I_S	Maximum Continuous Body Diode Forward Current		-	-	95	A
I_{SM}	Maximum Pulsed Body Diode Forward Current		-	-	360	A
V_{SD}	Body Diode Forward Voltage	V_{GS} = 0V, I_S = 30A	-		1.2	V
trr	Body Diode Reverse Recovery Time	I_F = 20A, di/dt = 100A/us	-	12	-	ns
Qrr	Body Diode Reverse Recovery Charge		-	3.6	-	nC

Notes: 1. Repetitive Rating: Pulse Width Limited by Maximum Junction Temperature.

2. E_{AS} condition: Starting T_J=25C, V_{DD}=30V, V_G=10V, R_G=25ohm, L=0.5mH, I_{AS}=20.16A, V_{DD}=0V during time in avalanche.

3. $R_{\theta JA}$ is measured with the device mounted on a 1inch^2 pad of 2oz copper FR4 PCB.

4. Pulse Test: Pulse Width≤300μs, Duty Cycle≤0.5%.

WildGoose Semiconductor

Typical Performance Characteristics

Figure 1: Power De-rating

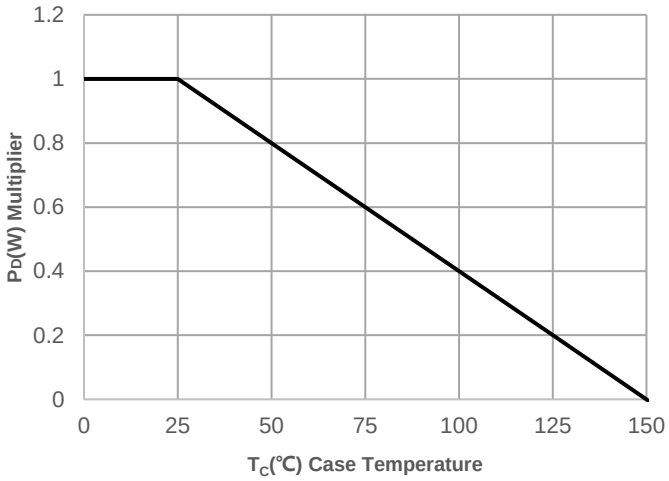

Figure 2: Current De-rating

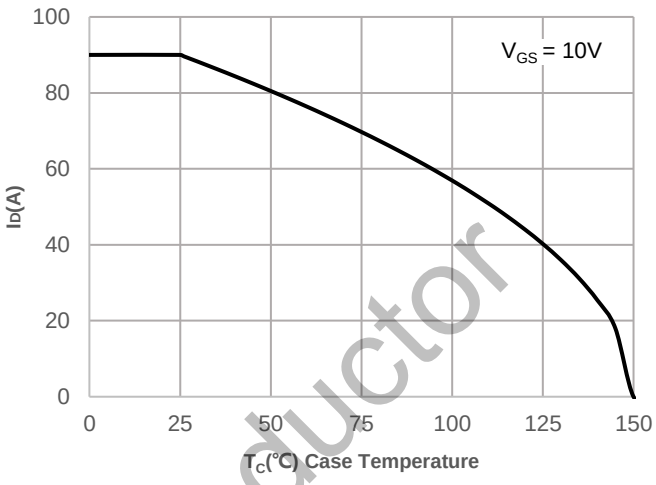

Figure 3: Normalized Maximum Transient Thermal Impedance

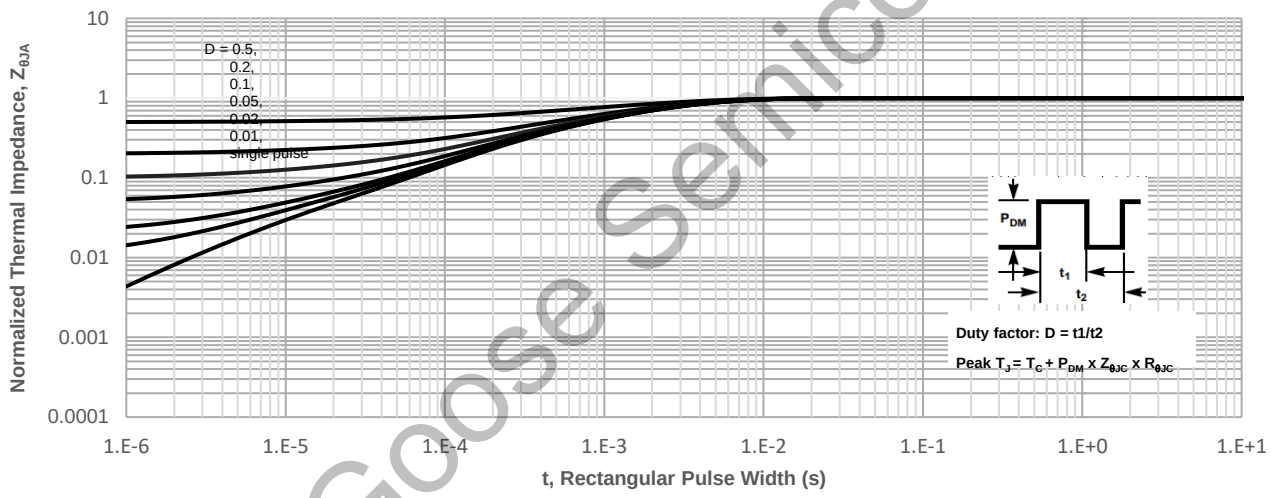

Figure 4: Peak Current Capacity

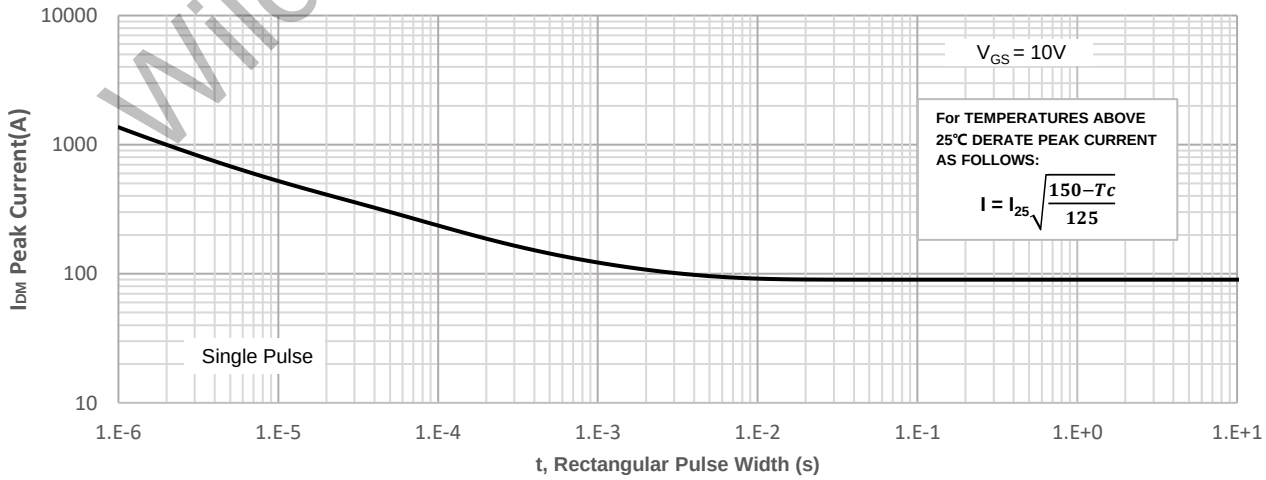

WildGoose Semiconductor

Typical Performance Characteristics

Figure 5: Output Characteristics

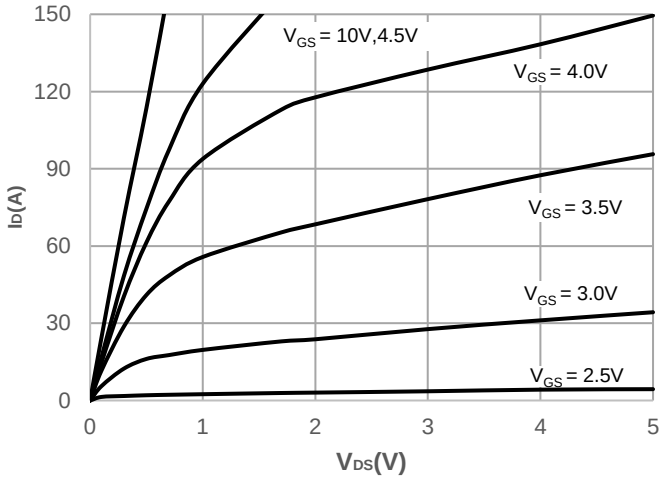

Figure 6: Typical Transfer Characteristics

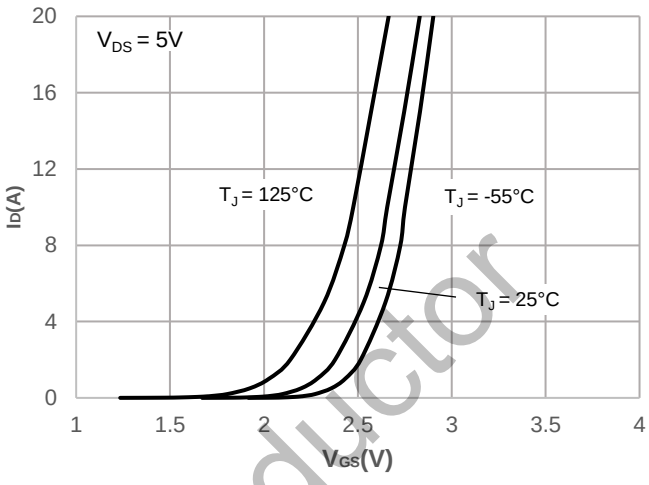

Figure 7: On-resistance vs. Drain Current

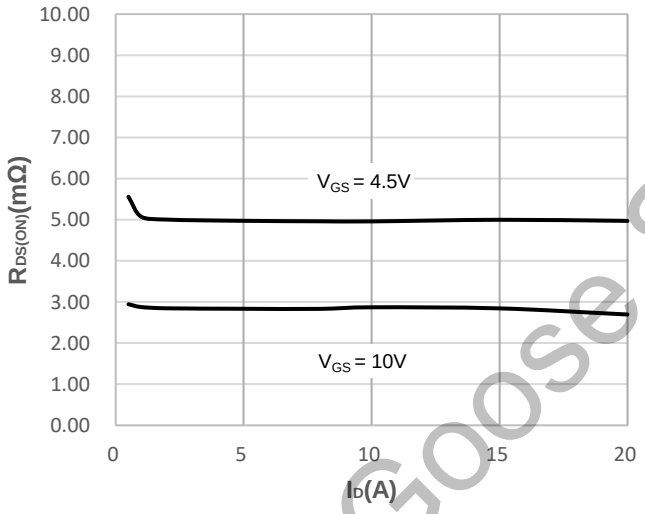

Figure 8: Body Diode Characteristics

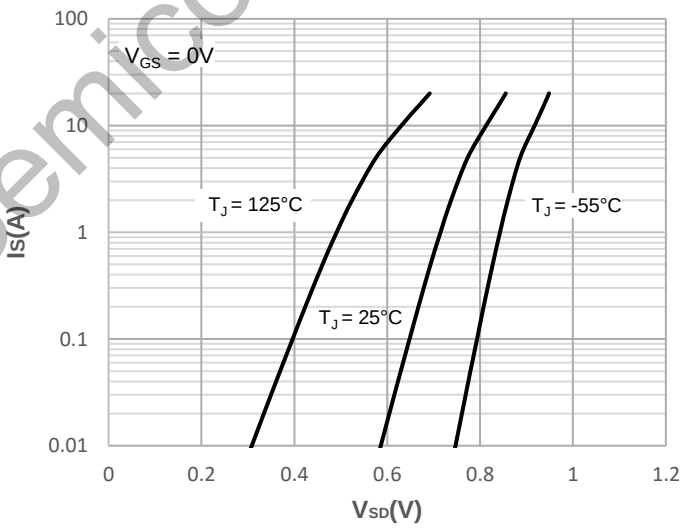

Figure 9: Gate Charge Characteristics

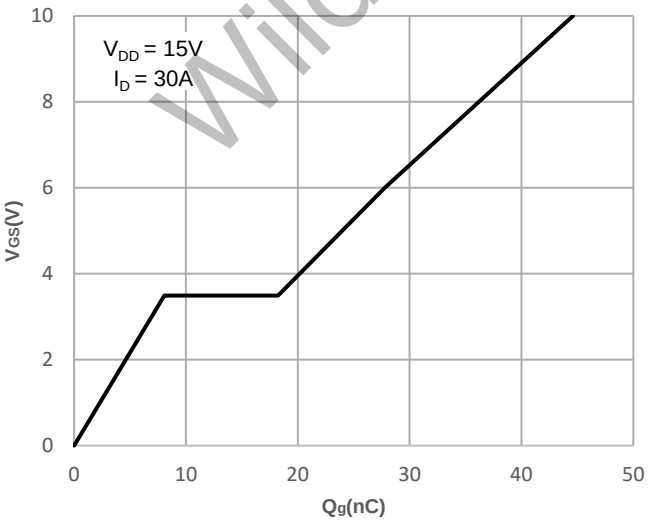

Figure 10: Capacitance Characteristics

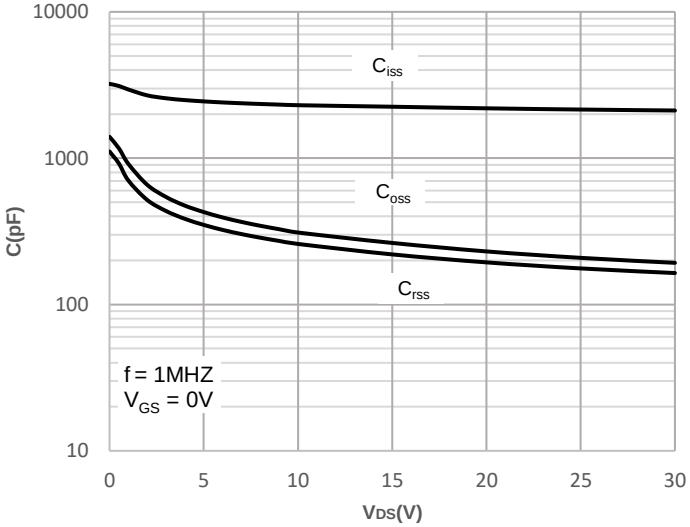

WildGoose Semiconductor

Typical Performance Characteristics

Figure 11: Normalized Breakdown voltage vs. Junction Temperature

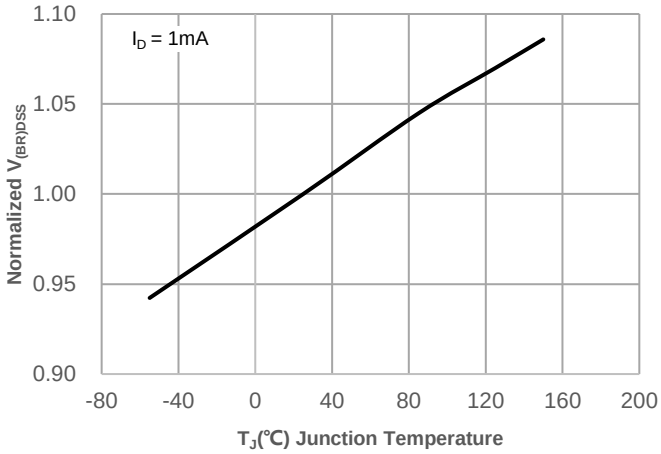

Figure 12: Normalized on Resistance vs. Junction Temperature

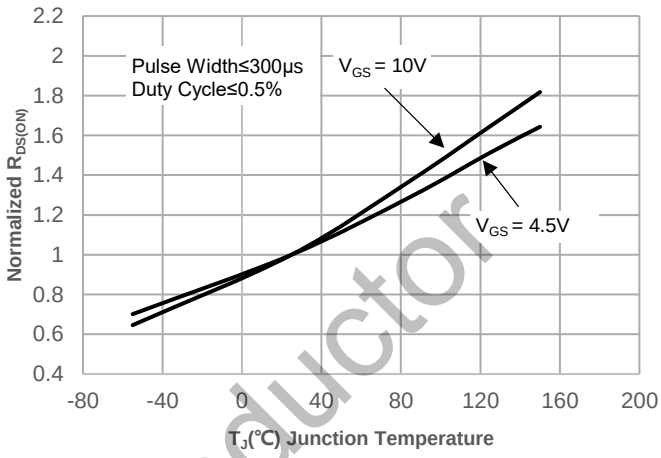

Figure 13: Normalized Threshold Voltage vs. Junction Temperature

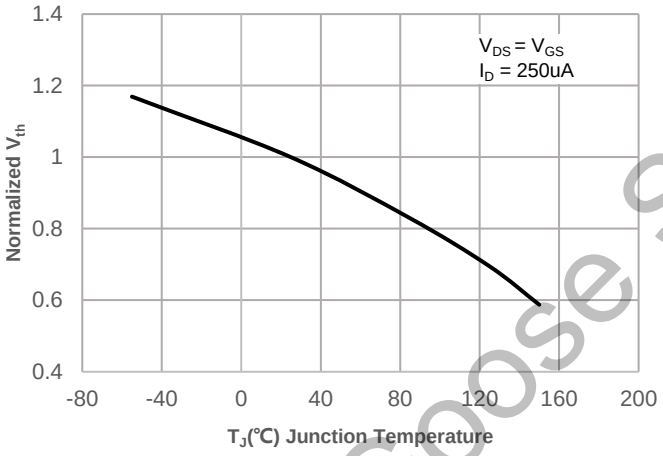

Figure 14: $R_{DS(ON)}$ vs. V_{GS}

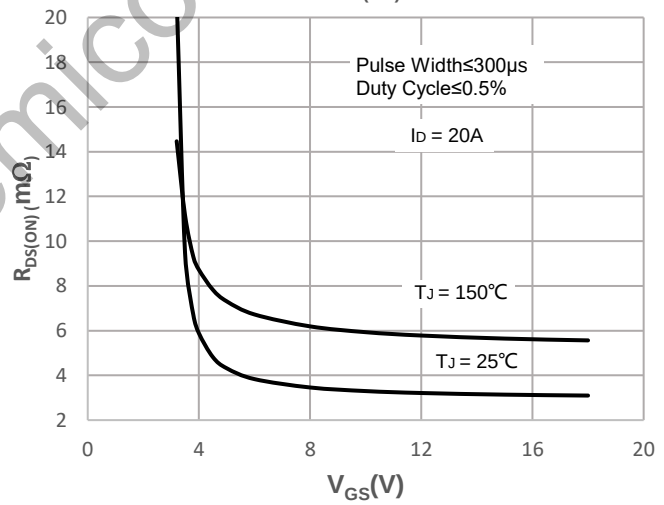

Figure 15: Maximum Safe Operating Area

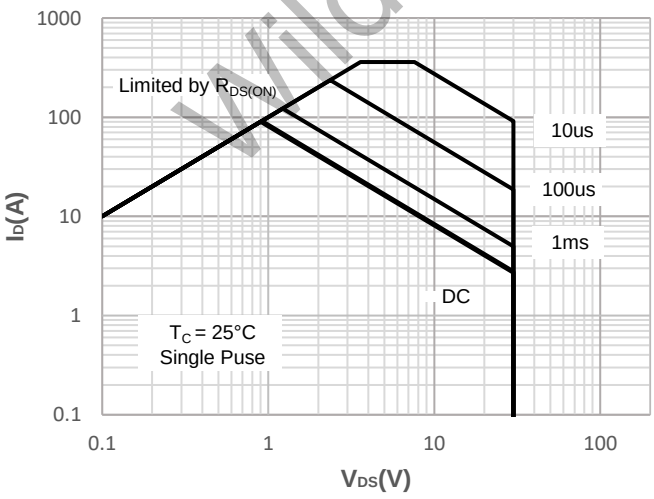

WildGoose Semiconductor

Test Circuit

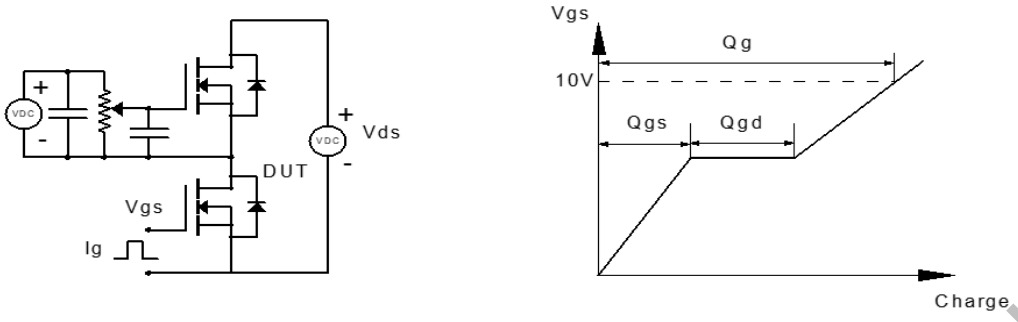

Figure 1: Gate Charge Test Circuit & Waveform

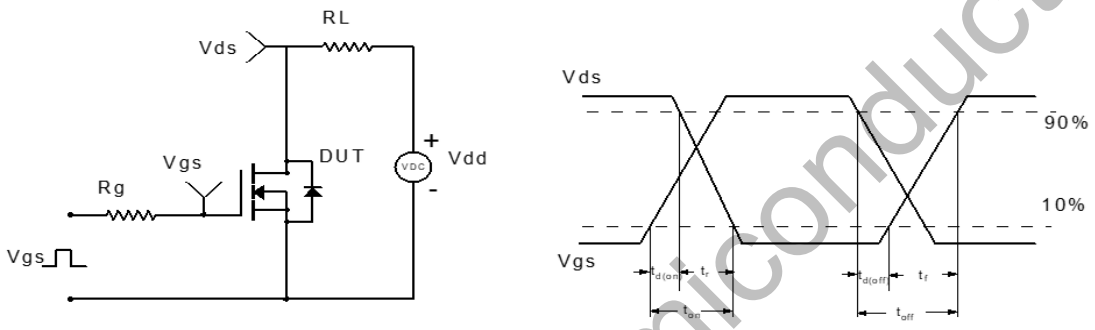

Figure 2: Resistive Switching Test Circuit & Waveform

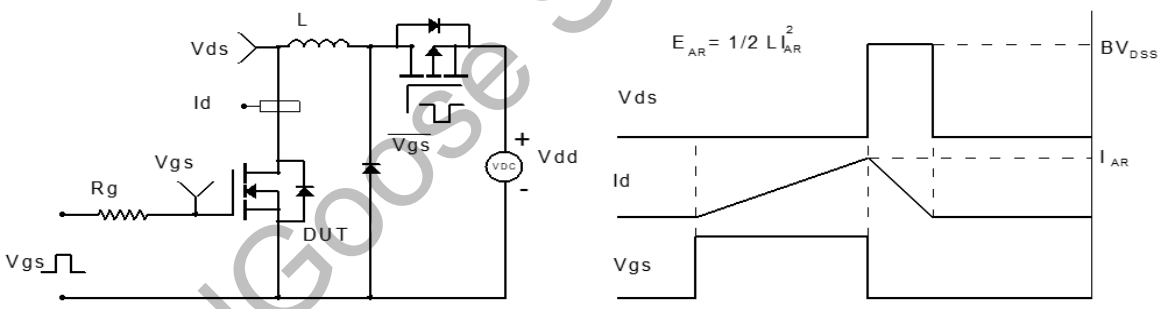

Figure 3: Unclamped Inductive Switching Test Circuit& Waveform

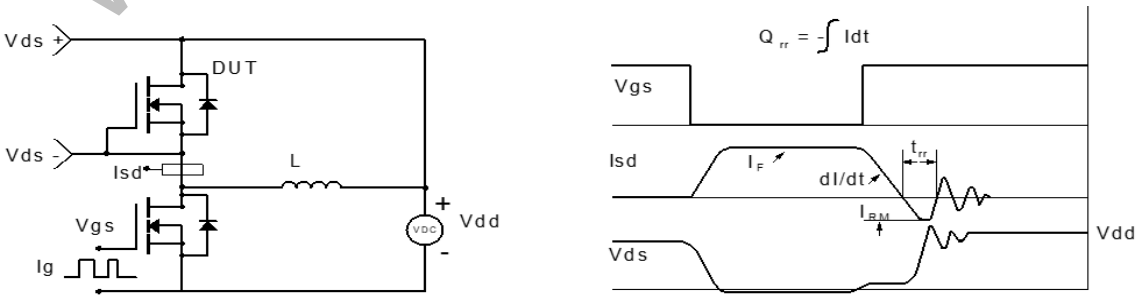

Figure 4: Diode Recovery Test Circuit & Waveform

WildGoose Semiconductor

Package Dimension

PDFN3*3

Unit:mm

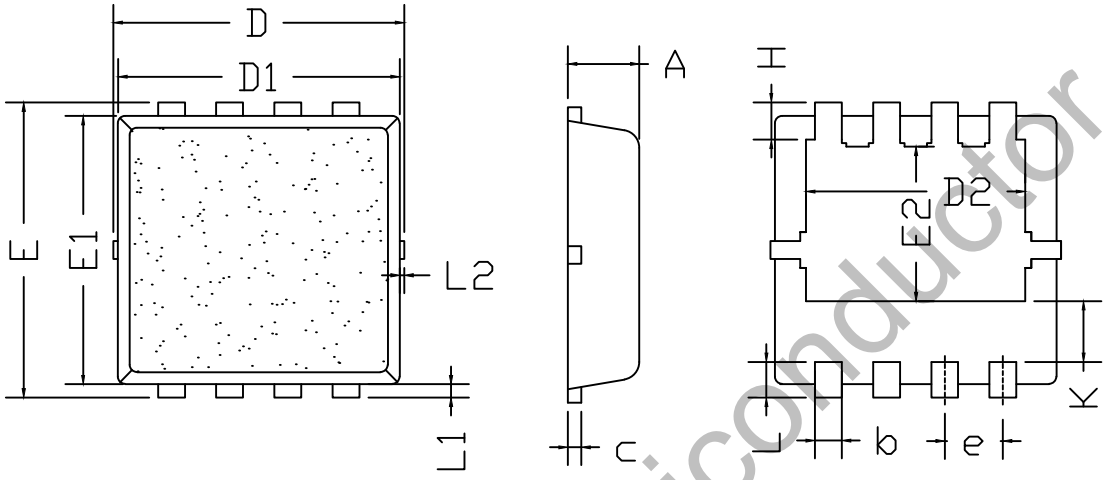

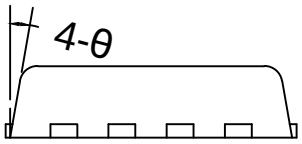

SYMBOL	mm		
	MIN	NOM	MAX
*A	0.70	0.80	0.90
*b	0.25	0.30	0.35
*c	0.20	0.25	0.30
D	3.25BSC		
*D1	3.05	3.15	3.25
D2	2.35	2.45	2.55
*e	0.55	0.65	0.75
E	3.30BSC		
*E1	2.90	3.00	3.10
E2	1.64	1.74	1.84
H	0.32	0.42	0.52
K	0.58	0.68	0.78
L	0.30	0.40	0.50
L1	0.10	0.15	0.20
L2	–	–	0.12
θ	8°	10°	12°

WildGoose Semiconductor