CHEVRON ELECTRONIC
诚潤電子

东莞市诚润电子科技有限公司
Chevron Electronic Technology Co Ltd
广东省东莞市厚街镇宝宏路鼎昊高新科技产业园 D 栋二楼
2nd Floor of Building D, Baohong Road Dinghao High-New Technology Industrial Park, Houjie Dongguan, Guangdong
Tel: +86 769-85888841 E-mail:ccre@chevronfuse.com
Web:www.chevronfuse.com

承 认 书

Specification For Approval

产品信息 Product information

产 品 名 称Product name: Φ5*20 陶瓷管高压型欧规保险丝
ϕ5*20 ceramic tube High Voltage European standardtube type fuse

产 品 规 格Product model: 5HE/5HEP xxA500V

拟 制 Prepared By	确 认 Reviewed By	批 准 Approved By
雷淑贤	邓 波	方 剑

客户承认 Customer Approval

客户名称 Customer name:

客户料号 Customer P/N:

经 办 Prepared By	审 核 Reviewed By	批 准 Approved By
确认结果 Verify the results：		
☐合格 Qualified	☐不合格 Unqualified	不合格原因 Root cause:

生效日期 Effective Date: 年 YY 月 MM 日 DD

1.如果本承认书获得贵司认可，请您签名后拷贝一份回传给我们。
If this acknowledgement letter is approved by your company, please sign it and send us a copy
2.当您下订单给诚润电子时，烦请在订单中列出上面产品信息表格中的产品名称和产品规格。
When you place an order with Chengrun Electronics, please kindly list the product names and specifications in the product information table above in the order form

变更履历

内　容	日　期	确 认
修改封面；增加履历页；修改内容；增加信赖性测试；完善产品特性项，	2025.5.5	方 剑
添加实物图片	2026.3.12	方 剑
9.C 增加存储条件；9.D.1 修改波峰焊条件	2026.7.1	方 剑
明确电阻范围±20%	2026.8.19	方 剑

编　制	确　认	批　准
李尚品	邓　波	方　剑

1.适用范围 / Scope of Application

本产品适用于各种电子，电器，仪表，光伏，充电桩，储能等电路中起过电流保护。

This product is suitable for overcurrent protection in various electronic, electrical, instrument, photovoltaic, charging pile, energy storage and other circuits

2.适用测试标准/ Standards

遵循 UL248-14；EN60127-2。

In accordance with UL248-14；EN60127-2。

3.单体结构及尺寸 / Structure and dimensions of individual units

<table>
<tr>
<td>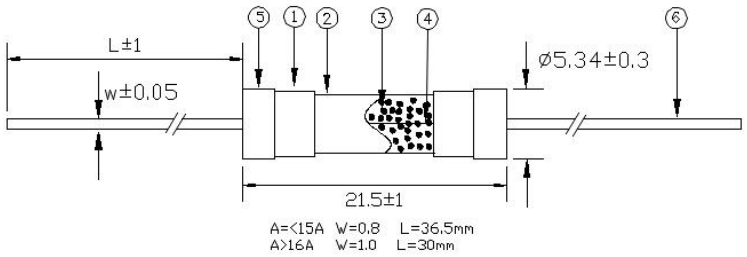
</td>
<td>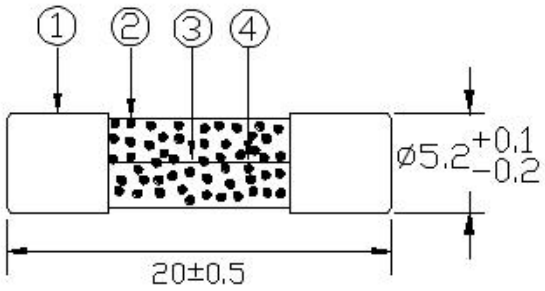
</td>
</tr>
<tr>
<td>5HEP</td>
<td>5HE</td>
</tr>
<tr>
<td>
</td>
<td>请参考左边实物图
Please refer to the picture on the left for the physical image

5HE=不带引线 Without lead
5HEP=带引线 With lead</td>
</tr>
</table>

编号 No	名称 Name	材质 Material
1	铜银帽 Ag Cu Cap	铜镀银 Ag Plated Cu
2	管体 tube	陶瓷 Ceramic
3	填充物 Filled	石英砂 SiO2
4	熔体 Element	合金线 Alloy
5	铜镍帽 Ni Cu Cap	铜镀镍 Ni Plated Cu
6	引线 Lead wire	铜镀锡 Sn plated Cu

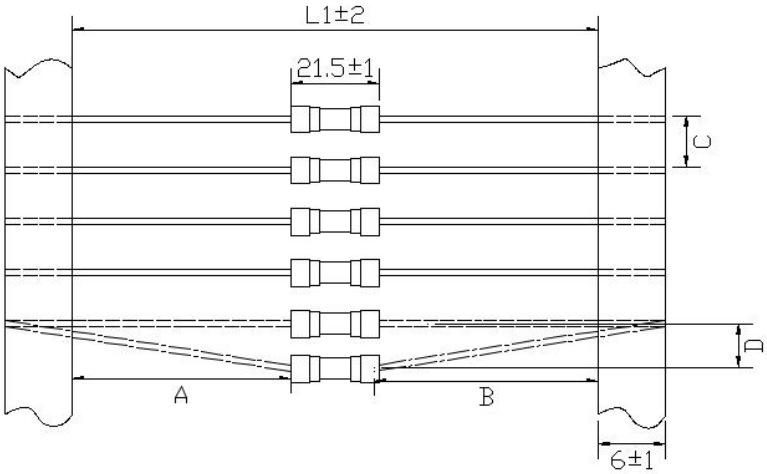

L1(mm)	A-B(mm)	C(mm)	D(mm)
50±2	1.4mm max	10mm	1.2mm Max
63±2	1.4mm max	10mm	1.2mm Max
73±2	1.4mm max	10mm	1.2mm Max

4.认证清单/ Certification List

安规标准 Agency	认证电压 Certified voltage	认证电流 Ampere Range	证书编号 Agency File Number
UR-CUR	500V AC/DC	100mA,125mA,160mA,200mA,250mA,315mA,400mA,500mA,630mA,800mA,1A,1.25A,1.6A,2A,2.5A,3.15A,4A,5A,6.3A,8A,10A,12A,12.5A,15A,16A,20A,	E358589
	500V DC	25A	E358589
TUV	500V AC	100mA,125mA,160mA,200mA,250mA,315mA,400mA,500mA,630mA,800mA,1A,1.25A,1.6A,2A,2.5A,3.15A,4A,5A,6.3A,8A,10A,12A,12.5A,15A,16A,20A,	J 50677970

5.产品标示 / Product Markin

保险丝外壳顶部需有下列标示：The top of the fuse cap shall have the following markings

举例：Example

	5HE/5HEP	Chevronfuse	2A	500V		AC/DC
1	2	3	4	5	6	7

1	工厂徽标：Chevron Logo:	
2	产品名称：Product Name	5HE/5HEP
3	公司名称：Company name	Chevronfuse
4	额定电流：Rated Current	2A
5	额定电压：Rated Voltage	500V
6	安规符号：Approval Marks	See the Product Characteristic
7	电压符号：Voltage Symbol	AC/DC

本体标记 Body Marking

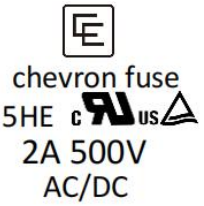



注意：A.对于标示的大小和位置没有规定 Size and position of the markings shall not be provided;

B. 其它电流对应安规符号请参考产品特性中 Marking 栏 For other current values, please refer to the "Marking" column in the product characteristics for the corresponding safety marking symbols

6.产品外观和形状要求/ Appearance and shape requirements

A．外观不应出现显著的污点、裂纹，标识应该容易辨识

There shall not be any remarkable stain and crack on the appearances, markings shall be easily legible

B．保险丝能通过直度规。

The fuse can pass through the straightening gauge

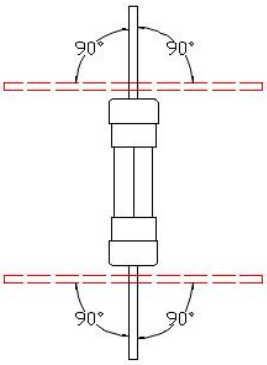

C 引脚拉力强度 / Lead Pull Strength

10 牛顿 10±1 秒 / 10N for 10±1 Seconds

D．引脚弯曲测试/引线必须能够承受弯曲 90°一次

Pin bend test、Bend 90 degrees once

*B 适用于 5HE; C,D 项适用于 5HEP;B is applicable to 5HE ; C and D are applicable to 5HEP

7.产品特性/Product Characteristic

Part No	Rated Current	Rated Voltage	Typic Cold DCR(mΩ±20%)	Breaking Capacity	I^2T A^2s	Safety Approvals
5HE/5HEP01000500	100mA	500Vac/dc	-	UL 500A@500Vac 500A@500Vdc TUV 100A@500Vac	-	cULus
5HE/5HEP01250500	125mA	500Vac/dc	-		-	cULus
5HE/5HEP01600500	160mA	500Vac/dc	-		-	cULus
5HE/5HEP02500500	250mA	500Vac/dc	-		-	cULus
5HE/5HEP03150500	315mA	500Vac/dc	-		-	cULus
5HE/5HEP04000500	400mA	500Vac/dc	-		-	cULus
5HE/5HEP05000500	500mA	500Vac/dc	-		-	cULus
5HE/5HEP06300500	630mA	500Vac/dc	-		-	cULus

5HE/5HEP08000500	800mA	500Vac/dc	286mΩ		0.678	
5HE/5HEP11000500	1A	500Vac/dc	155mΩ		1.74	
5HE/5HEP11250500	1.25A	500Vac/dc	124mΩ		2.61	
5HE/5HEP11600500	1.6A	500Vac/dc	94mΩ		4.65	
5HE/5HEP12000500	2A	500Vac/dc	64mΩ		8.24	
5HE/5HEP12500500	2.5A	500Vac/dc	46mΩ		15.04	
5HE/5HEP13150500	3.15A	500Vac/dc	30mΩ		16.48	
5HE/5HEP14000500	4A	500Vac/dc	20mΩ		28.75	
5HE/5HEP15000500	5A	500Vac/dc	17mΩ		56.51	
5HE/5HEP16300500	6.3A	500Vac/dc	12mΩ		89.71	
5HE/5HEP28000500	8A	500Vac/dc	9.2mΩ		157	
5HE/5HEP21000500	10A	500Vac/dc	6.8mΩ		350	
5HE/5HEP21200500	12A	500Vac/dc	5.8mΩ		424	
5HE/5HEP21250500	12.5A	500Vac/dc	4.6mΩ		625	
5HE/5HEP21500500	15.0A	500Vac/dc	4.1mΩ		936	
5HE/5HEP21600500	16A	500Vac/dc	3.4mΩ		1225	
5HE/5HEP22000500	20A	500Vac/dc	2.5mΩ		2000	
5HE/5HEP22500500	25A	500Vac/dc	-		-	

*不带引线为 5HE,带引线料号为 5HEP;the leadless one is 5HE,The leaded part number is 5HEP;

例：5HE13150250 表示不带引线 3.15A250V，5HE13150250 indicates 3.15A 250V without lead

5HEP13150250 表示带引线 3.15A250V，5HE13150250 indicates 3.15A 250V with lead

8.特性测试/ characteristic test

测试条件/Test Condition

A．所有的测试环境温度保持在 25±10°的范围内

All the test environments are maintained within the temperature range of 25 ± 10 °C

B．IT 特性测试参考下表/IT Characteristic test follow up the form

额定电流的% % of Ampere Rating	熔断时间 Opening Time				
	<1A	1A-3.15A	4A-6.3A	8A-10A	12A-25A
210%	<30min	<30min	<30min	<30min	<30min
275%	250ms-80s	750ms-8s	750ms-8s	750ms-8s	750ms-8s
400%	50ms-5s	95ms-5s	150ms-5s	150ms-5s	150ms-5s
1000%	5s-150ms	10s-150ms	10s-150ms	10s-150ms	10s-150ms

C．时间电流曲线参考图/IT time current curve

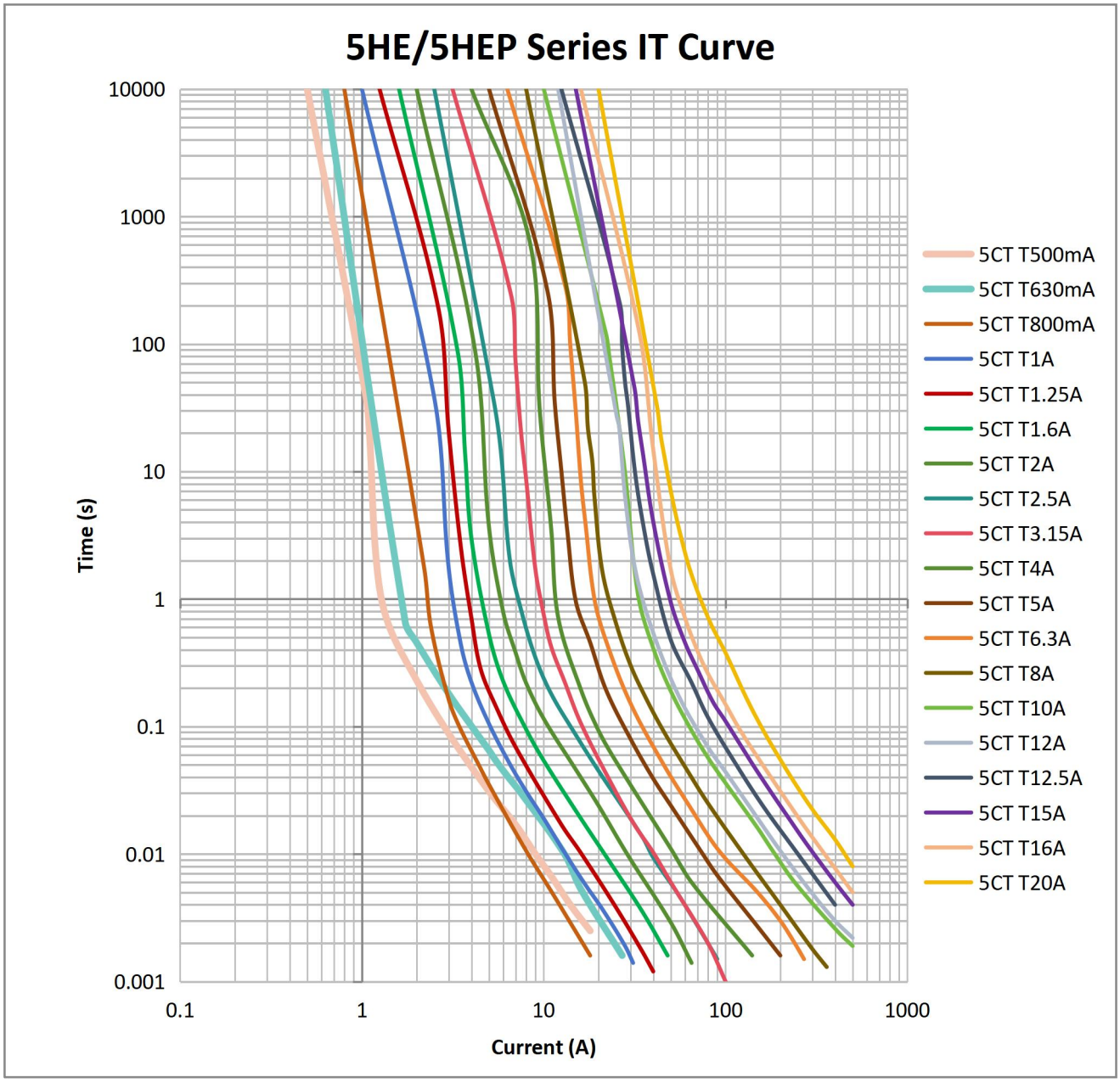

9.环境特性/ Environmental Characteristic

A．正常操作温度范围-55℃ ~ +125℃

Operarting temperature -55℃ ~ +125℃ nomal

B．若工程师在设计保险丝安装的环境温度超出 25℃时，需要考虑环境温度对保险丝的寿命影响，请参考下面：温度-电流曲线图

If the engineer finds that the ambient temperature where the fuse is installed exceeds 25℃, he/she needs to consider the influence of ambient temperature on the lifespan of the fuse. Please refer to the following:Temperature - Current Curve Chart

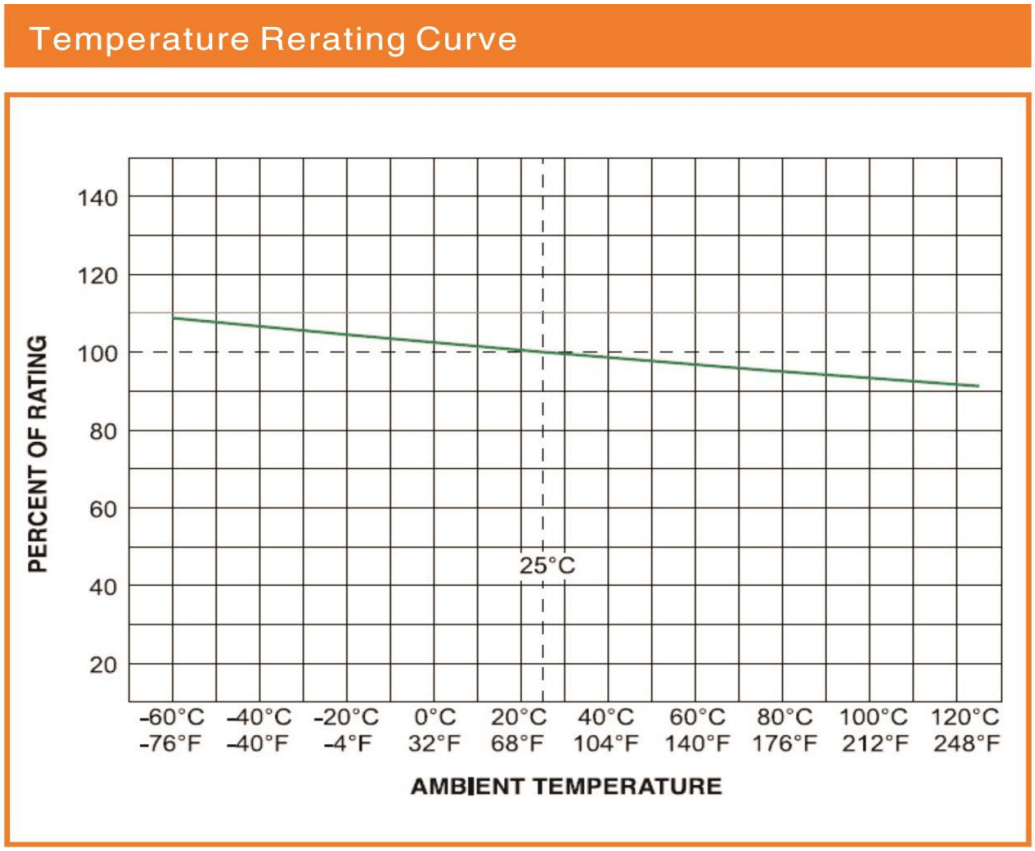

C．存储条件 / Storage Conditions

在温度+5℃~30℃、相对湿度 25% ~ 60%的密闭条件下可存放 2 年。

Under airtight in temperature+5℃~ 30℃、relative humidity 25% ~ 60% can store 2 years.

在温度+10℃~60℃、相对湿度为 95%的非露天下最多可存放 30 天。

Without dew in temperature+10℃~ 60℃、relative humidity be 95% maximum value for 30days.

D. 建议客户焊接参数

1．波峰焊参数 / Wave Parameters:

锡炉温度及焊接时间 / Solder Pot Temperature: 265℃ ±5℃； Solder Dwell Time: 5~6s

2．手工焊参数 / Hand-Solder Parameters:

烙铁温度及焊接时间 / Solder Iron Temperature: 370±10℃； Heating Time: 3s Max

E．建议客户选择以下其中一种保险丝座配合使用： It is suggested that customers choose one of the following fuse holders for use in conjunction

1．以下为示意图，更多请参考本公司网站/The diagram below is for reference; please visit our company website for more information

保险丝座、 Fuse hloder			保险丝盒 fuse box
保险丝夹、 Fuse clip			保险丝盒 fuse box
保险丝盒 fuse box			保险丝盒 fuse box

F．信赖性测试/Reliability test

编号 No	项目 Item	内容 content
1	绝缘阻抗测试 Insulation Resistance test	100000Ω Minimal
2	可焊性测试 Solderability test	240±5℃; T=3±0.5s; Cover≧95%
3	耐焊接热测试 Soldering heat resistance test	260℃ 10s; IΔRI<10%
4	热冲击测试 Thermer shock	100 ctcles between -65℃~+125℃ 60minite; each extreme IΔRI<10%
5	高低温储存 High-low temperature storege	+125℃/-55℃ each 96 hrs; IΔRI<10%
6	高温操作 High temperature operating life	70±2℃; 0.6In;96hrs; IΔRI<10%
7	盐雾测试 Salt spray test	5% salt solution; 48hrs; IΔRI<10%
8	耐温性测试 Humidity test	T=40±2℃,90%-95%RH;1000hrs, IΔRI<10%

10.包装 / Packaging

1. 包装袋/盒上标签需明确产品料号，产品电压/电流及安规符号等信息；

   The labels on the packaging bags/boxes should clearly indicate the product part number, product voltage/current and safety symbols, etc

2. 包装材料均符合 ROHS/REACH/HF 的环保要求， 且包装材料不会和零件发生化学反应，造成不良；

   The packing material conforms to ROHS/REACH/HF environmental protection request. And the packing materials will not have the chemical reaction with the components

3. 散装产品和编带产品信息/ Bulk and type reel informatiion

包装选项 Packaging Option	胶袋数量(pcs) Plastic bag Quantity	内盒数量(pcs) Inner box Quantity	外箱数量(pcs) Outer box Quantity	内部磁间距(mm) Inside Tape Spacing
散装 Bulk	500	2000	20000	N/A
散装(带引线) Bulk(with pigtail type)	200	800	8000	N/A

4. 其它定制可协商/ Other customization can be negotiated

5. 包装盒尺寸图/ Packaging Box Dimension Diagram

散装产品内盒尺寸↓ Dimensions of the inner box for bulk products	散装产品外箱尺寸↓ Dimensions of the outer carton for bulk products
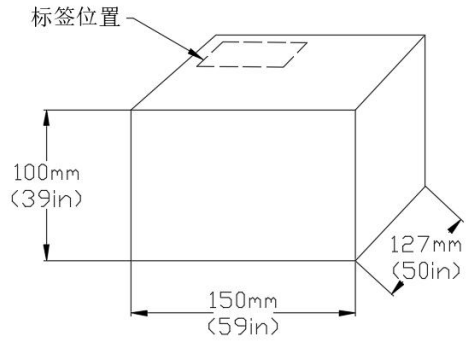	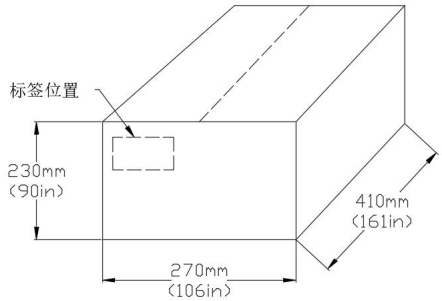

11.其它/Other

1. 如果在使用中超出本规格书要求，须经双方协商确认；

   If the requirements exceed those stipulated in this specification during the usage, it shall be confirmed through consultation between both parties.

2. 如果本规格书有不适当的地方，须经过双方协商由本公司修改；

   If there is anything inappropriate in this specification, it shall be revised by our company after mutual consultation between both parties