WGU60N04/WGD60N04

TO-251 TO-252

RoHS COMPLIANT

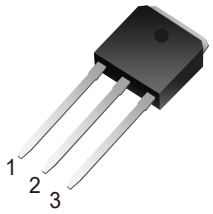

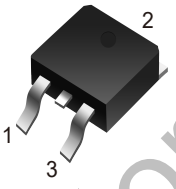

Features:

- ☐ Advanced Trench Technology.
- ☐ Excellent Switching Characteristics.
- ☐ Extended Safe Operating Area.
- ☐ Unrivalled Gate Charge :Qg= 48 nC (Typ.).
- ☐ BVDSS=40 V,I_D=60 A
- ☐ R_{DS}(on) : 7mΩ (Max) @V_G=10V
- ☐ 100% Avalanche Tested

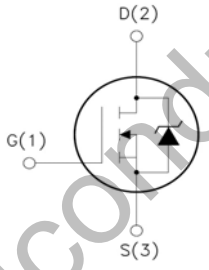

1.Gate (G)
2.Drain (D)
3.Source (S)

Absolute Maximum Ratings (Ta=25℃ unless otherwise noted)

Symbol	Parameter		Value	Units
V_{DS}	Drain-to-Source Voltage		40	V
V_{GS}	Gate-to-Source Voltage		±20	V
I_D	Continuous Drain Current	T_C = 25°C	60	A
		T_C = 100°C	38	
I_{DM}	Pulsed Drain Current (1)		240	A
E_{AS}	Single Pulsed Avalanche Energy (2)		100	mJ
P_D	Power Dissipation	T_C = 25°C	114	W
$R_{\theta JA}$	Thermal Resistance, Junction to Ambient(3)		37	°C/W
$R_{\theta JC}$	Thermal Resistance, Junction to Case		1.1	
T_J, T_{STG}	Junction & Storage Temperature Range		-55 to 150	°C

WinGoose Semiconductor

Electrical Characteristics (T_J = 25°C unless otherwise specified)

Symbol	Parameter	Conditions	Min.	Typ.	Max.	Unit
Off Characteristics						
$V_{(BR)DSS}$	Drain-Source Breakdown Voltage	I_D = 250μA, V_{GS} = 0V	40	-	-	V
I_{DSS}	Zero Gate Voltage Drain Current	V_{DS} = 40V, V_{GS} = 0V	-	-	1.0	μA
I_{GSS}	Gate-Body Leakage Current	V_{DS} = 0V, V_{GS} = ±20V	-	-	±100	nA
On Characteristics						
$V_{GS(th)}$	Gate Threshold Voltage	V_{DS} = V_{GS}, I_D = 250μA	1.3	1.9	2.5	V
$R_{DS(ON)}$	Static Drain-Source ON-Resistance(4)	V_{GS} = 10V, I_D = 30A	-	5.4	7.0	mΩ
		V_{GS} = 4.5V, I_D = 20A	-	8.1	10.5	mΩ
Dynamic Characteristics						
C_{iss}	Input Capacitance	V_{GS} = 0V, V_{DS} = 20V, f = 1MHz	-	2443	-	pF
C_{oss}	Output Capacitance		-	167	-	pF
C_{rss}	Reverse Transfer Capacitance		-	138	-	pF
Q_g	Total Gate Charge	V_{GS} = 0 to 10V V_{DS} = 20V, I_D = 20A	-	48	-	nC
Q_{gs}	Gate Source Charge		-	10	-	nC
Q_{gd}	Gate Drain("Miller") Charge		-	10	-	nC
Switching Characteristics						
$t_{d(on)}$	Turn-On DelayTime	V_{GS} = 10V, V_{DD} = 20V I_D= 20A, R_{GEN} = 3Ω	-	10	-	ns
t_r	Turn-On Rise Time		-	28	-	ns
$t_{d(off)}$	Turn-Off DelayTime		-	40	-	ns
t_f	Turn-Off Fall Time		-	7	-	ns
Drain-Source Diode Characteristics and Max Ratings						
I_S	Maximum Continuous Drain to Source Diode Forward Current		-	-	60	A
I_{SM}	Maximum Pulsed Drain to Source Diode Forward Current		-	-	240	A
V_{SD}	Drain to Source Diode Forward Voltage	V_{GS} = 0V, I_S = 30A	-	-	1.2	V
trr	Body Diode Reverse Recovery Time	I_F = 20A, di/dt = 100A/us	-	11	-	ns
Qrr	Body Diode Reverse Recovery Charge		-	5	-	nC

Notes: 1. Repetitive Rating: Pulse Width Limited by Maximum Junction Temperature.

2. E_{AS} condition: Starting T_J=25C, V_{DD}=20V, V_G=10V, R_G=25ohm, L=0.5mH, I_{AS}=20A

3. $R_{\theta JA}$ is measured with the device mounted on a 1inch^2 pad of 2oz copper FR4 PCB

4. Pulse Test: Pulse Width≤300μs, Duty Cycle≤0.5%.

WinGoose Semiconductor

Typical Performance Characteristics

Figure 1: Output Characteristics

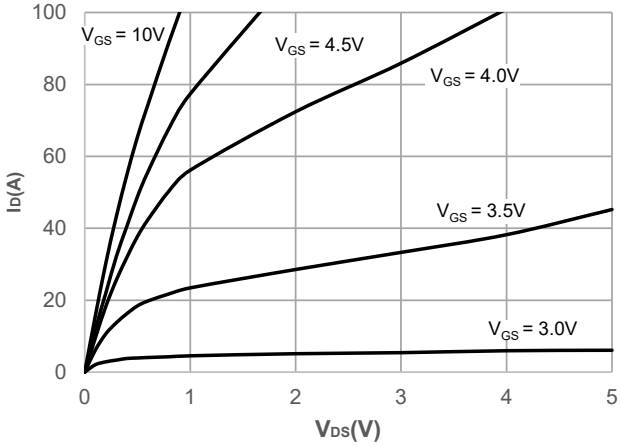

Figure 2: Typical Transfer Characteristics

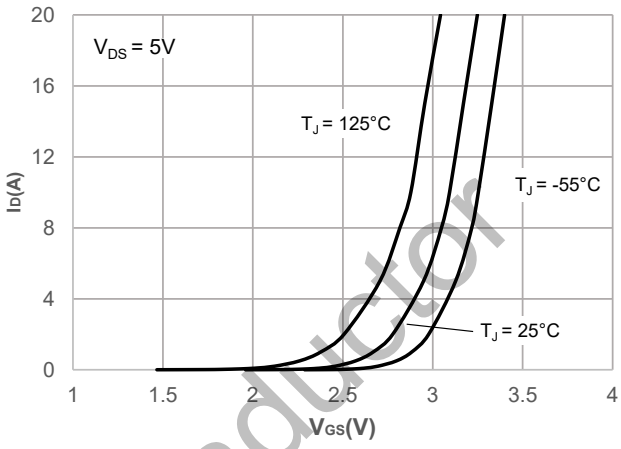

Figure 3: On-resistance vs. Drain Current

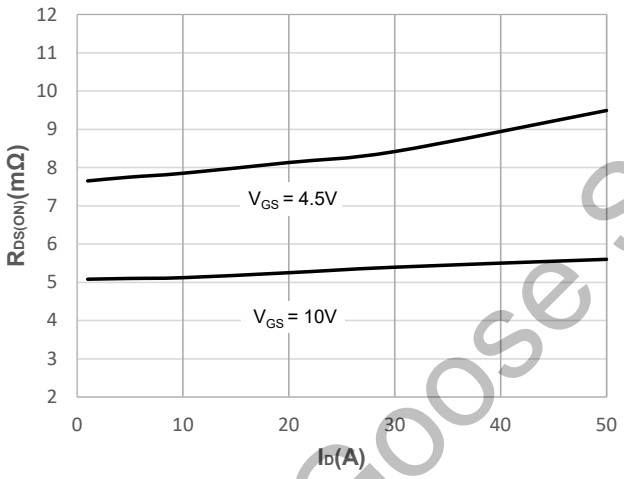

Figure 4: Body Diode Characteristics

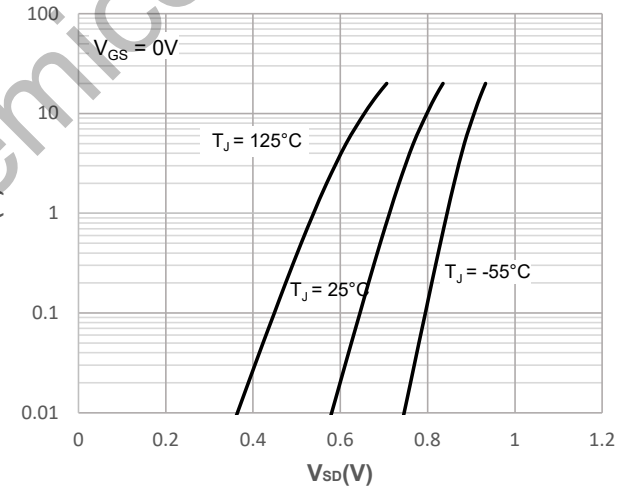

Figure 5: Gate Charge Characteristics

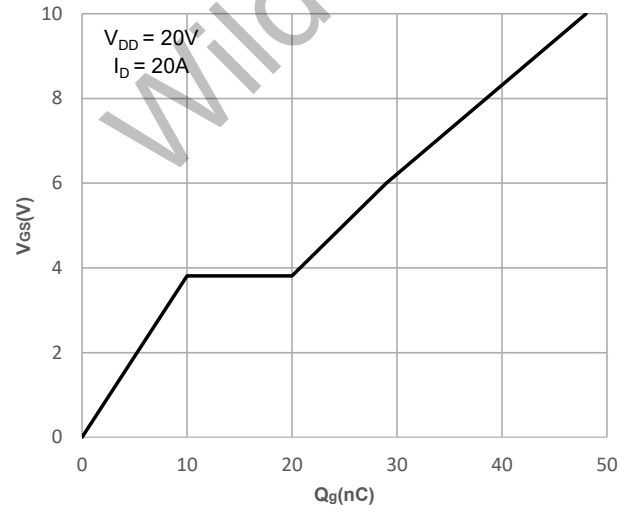

Figure 6: Capacitance Characteristics

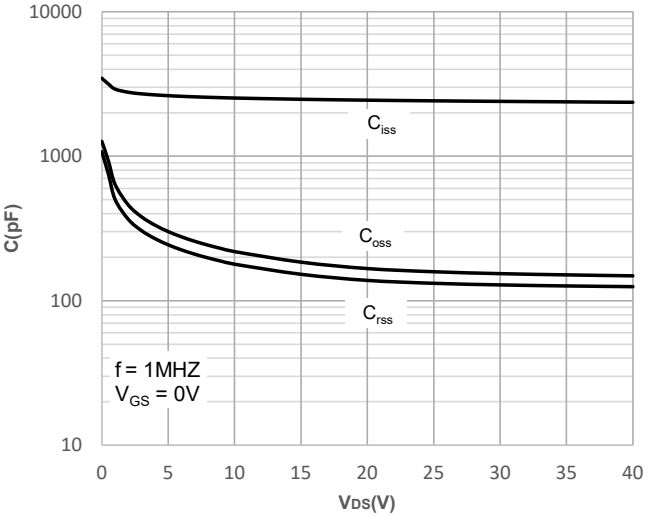

WildGoose Semiconductor

Typical Performance Characteristics

Figure 7: Normalized Breakdown voltage vs. Junction Temperature

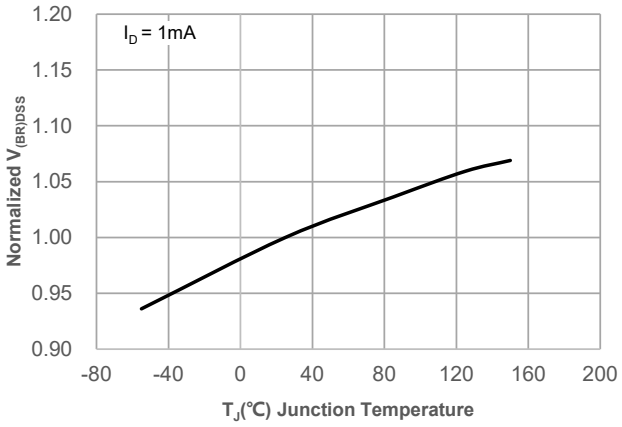

Figure 8: Normalized on Resistance vs. Junction Temperature

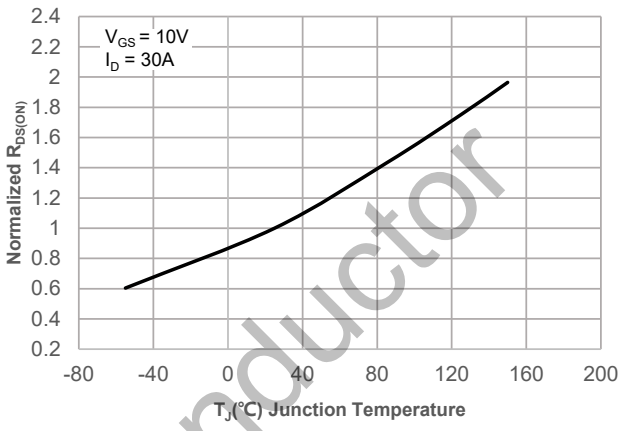

Figure 9: Maximum Safe Operating Area

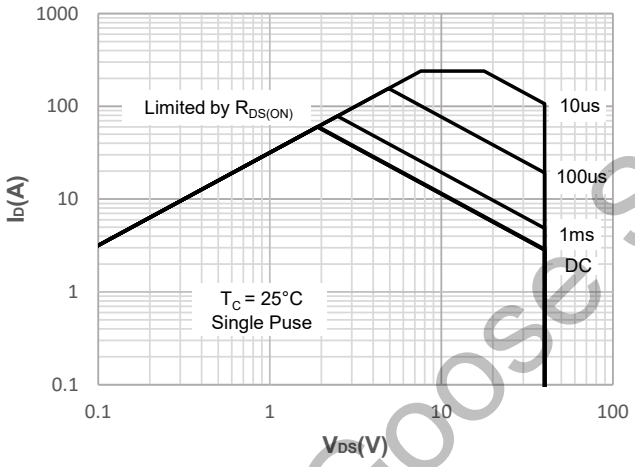

Figure 10: Maximum Continuous Drian Current vs. Case Temperature

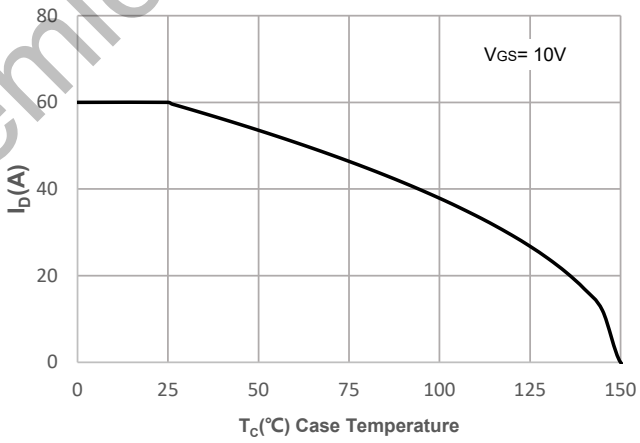

Figure 11: Normalized Maximum Transient Thermal Impedance

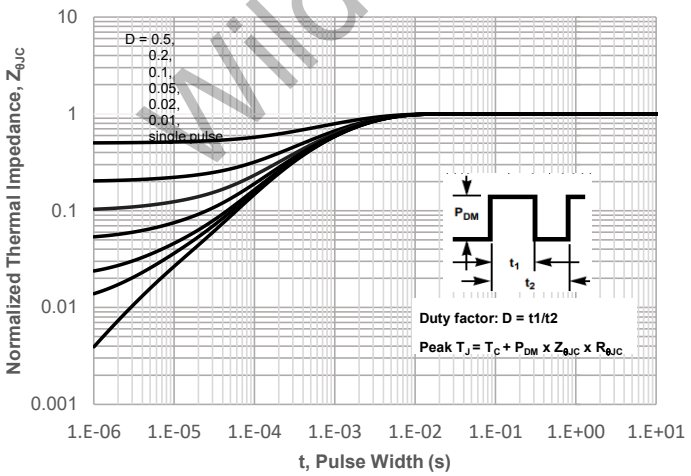

Figure 12: Peak Current Capacity

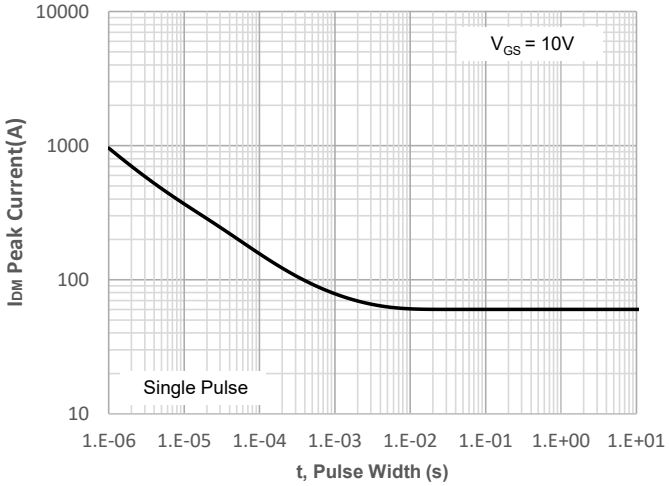

WillGoose Semiconductor

Test Circuit

Gate Charge Test Circuit & Waveform

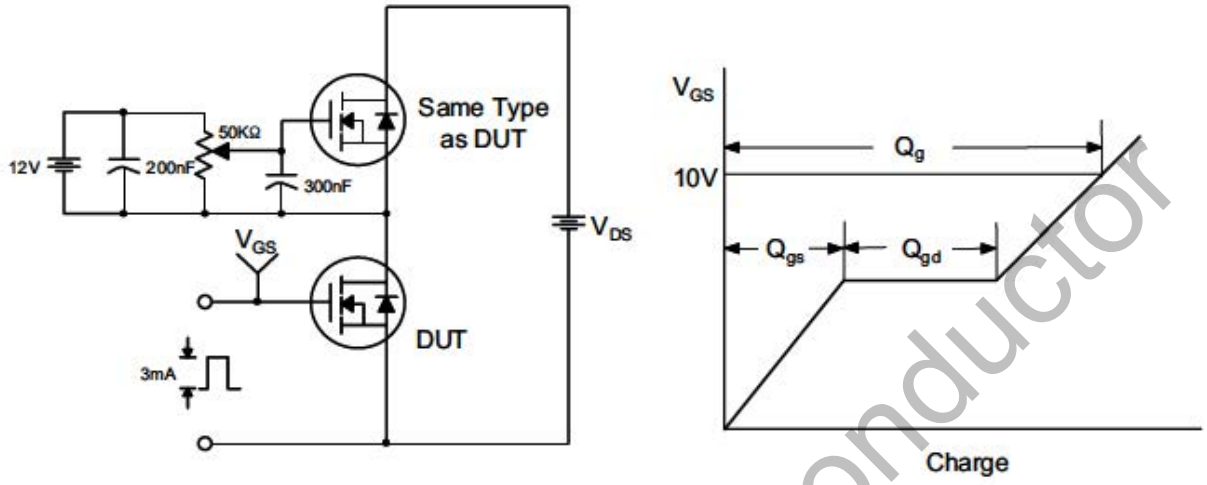

Resistive Switching Test Circuit & Waveforms

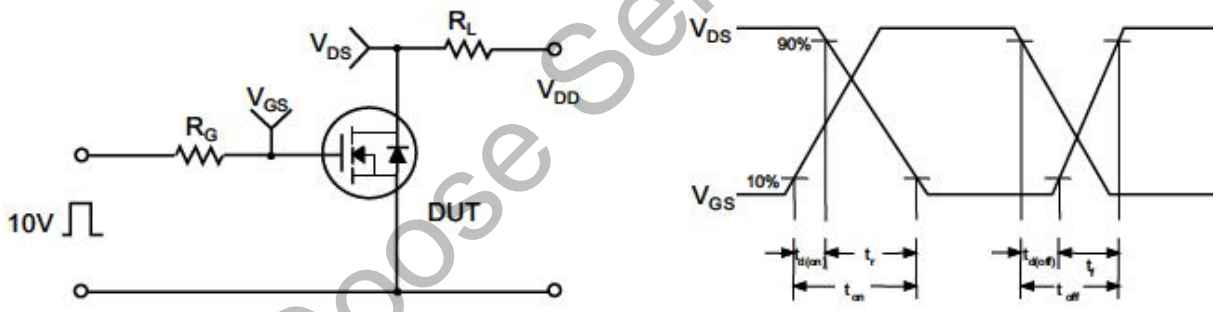

Unclamped Inductive Switching Test Circuit & Waveforms

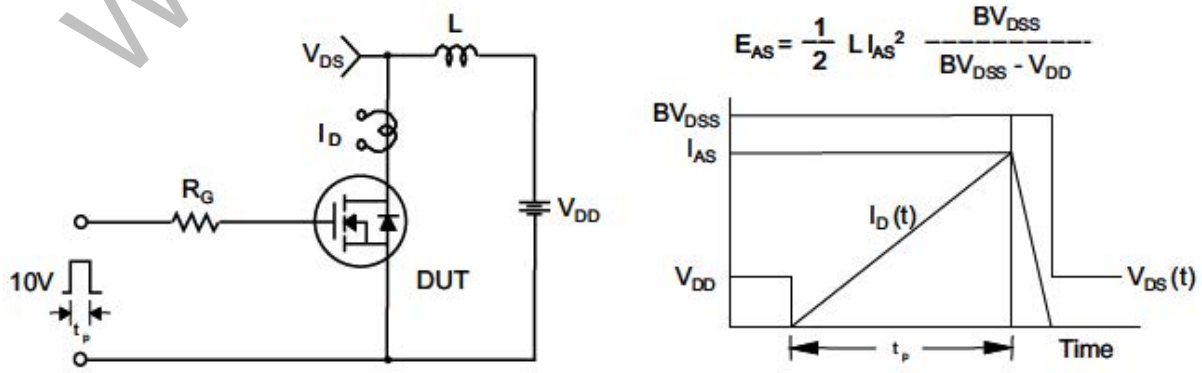

WildGoose Semiconductor

Test Circuit

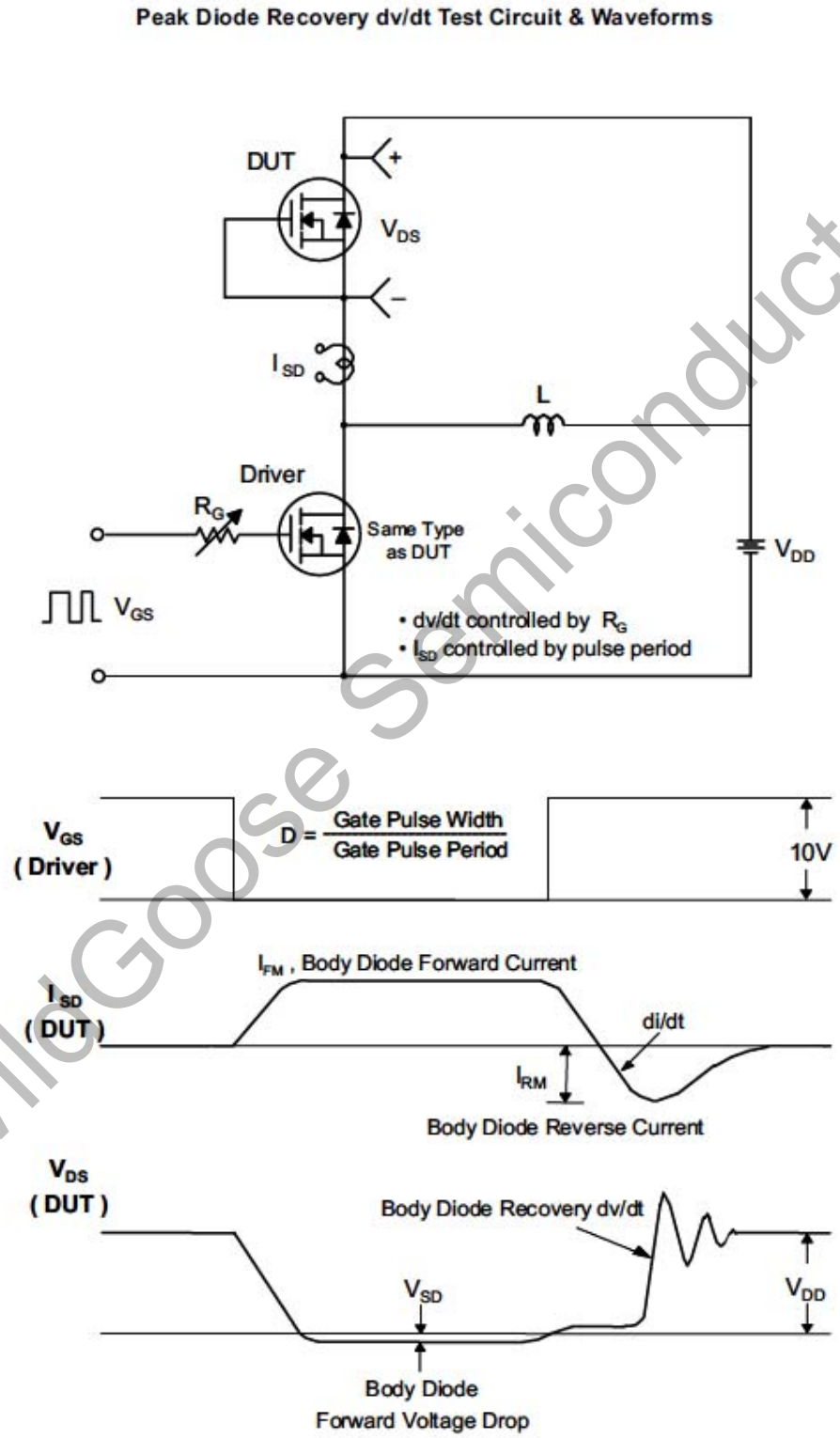

WilGoose Semiconductor

Package Dimension

TO-251

Unit: mm

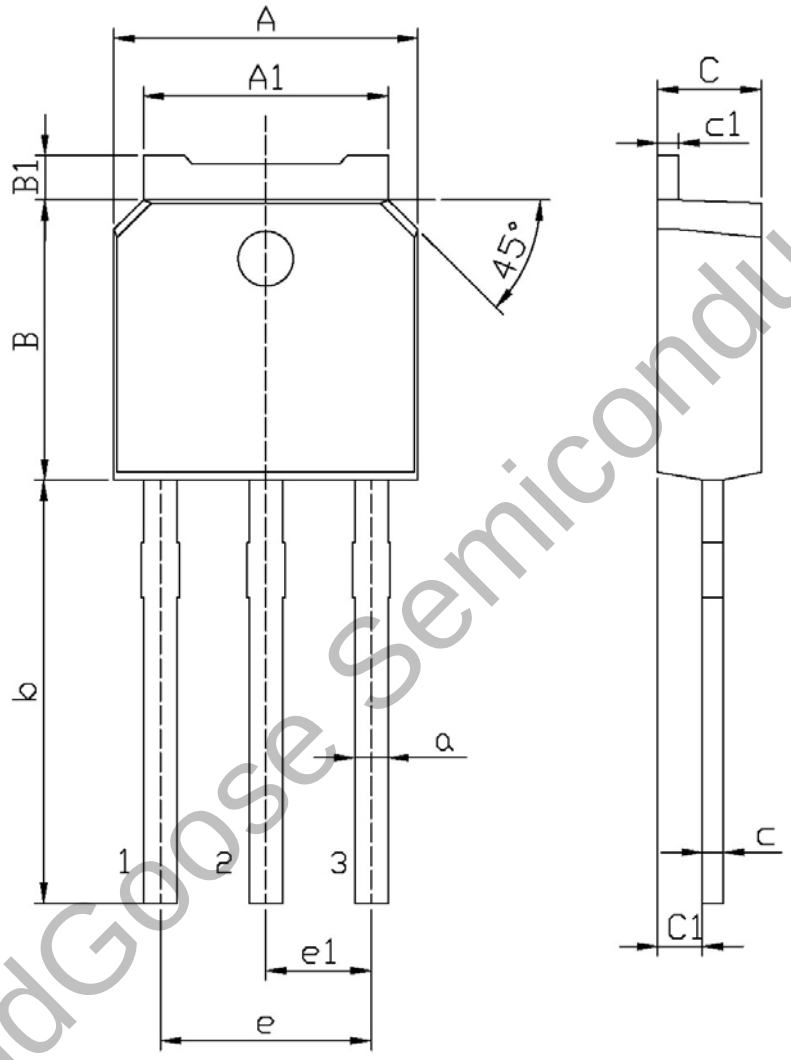

WildGoose Semiconductor

Symbol	Dimensions In Millimeters		Symbol	Dimensions In Millimeters	
	Min	Max		Min	Max
A	6.45	6.75	a	0.70	0.90
A1	5.20	5.40	b	9.00	9.40
B	5.95	6.25	c	0.45	0.55
B1	0.95	1.25	c1	0.45	0.55
C	2.20	2.40	e1	2.24	2.34
C1	0.95	1.15	e	4.43	4.73

Package Dimension

TO-252

Unit: mm

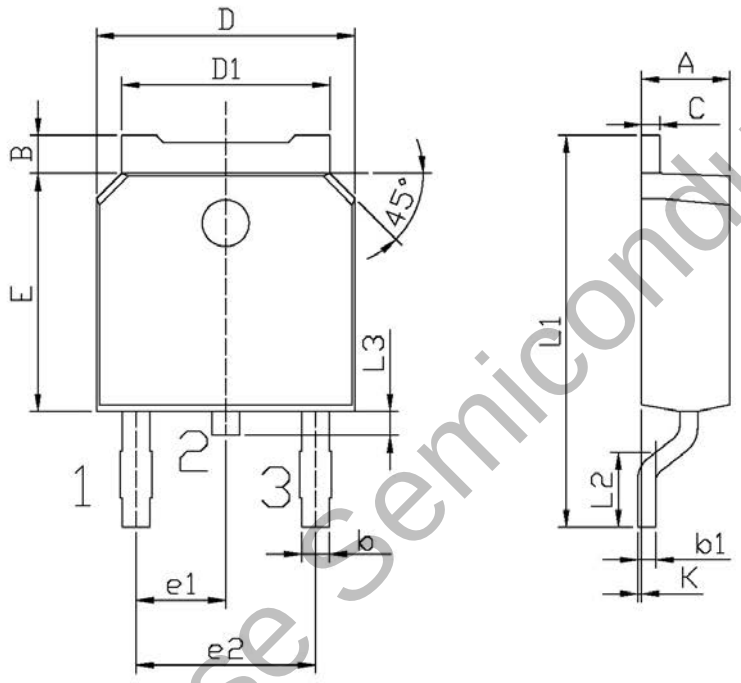

WildGoose Semiconductor

单位：mm

Symbol	Dimensions In Millimeters		Symbol	Dimensions In Millimeters	
	Min	Max		Min	Max
A	2.20	2.40	E	5.95	6.25
B	0.95	1.25	e1	2.24	2.34
b	0.70	0.90	e2	4.43	4.73
b1	0.45	0.55	L1	9.85	10.35
C	0.45	0.55	L2	1.25	1.75
D	6.45	6.75	L3	0.60	0.90
D1	5.20	5.40	K	0.00	0.10