WG1002V

Features:

- ☐ Low Intrinsic Capacitances.
- ☐ Excellent Switching Characteristics.
- ☐ Extended Safe Operating Area.
- ☐ Unrivalled Gate Charge :Qg= 5.2 nC (Typ.).
- ☐ BVDSS=100V,I_D=2A
- ☐ R_{DS}(on) : 124mΩ (Max) @V_G=10V
- ☐ 100% Avalanche Tested

SOT-23 RoHS COMPLIANT

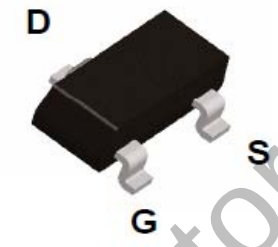

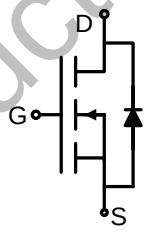

Schematic diagram

MARKING: WG1002V

WildGoose Semiconductor

Absolute Maximum Ratings (T_A=25℃unless otherwise noted)

Parameter	Symbol	Limit	Unit
Drain-Source Voltage	V_{DS}	100	V
Gate-Source Voltage	V_{GS}	±20	V
Drain Current-Continuous	I_D	2	A
Drain Current-Pulsed (Note 1)	I_{DM}	5	A
Maximum Power Dissipation	P_D	1.25	W
Operating Junction and Storage Temperature Range	T_J,T_{STG}	-55 To 150	℃

Thermal Characteristic

Thermal Resistance,Junction-to-Ambient (Note 2)	$R_{\theta JA}$	100	℃/W

Electrical Characteristics (T_A=25℃unless otherwise noted)

Parameter	Symbol	Condition	Min	Typ	Max	Unit
Off Characteristics						
Drain-Source Breakdown Voltage	BV_{DSS}	V_{GS}=0V I_D=250μA	100	-	-	V
Zero Gate Voltage Drain Current	I_{DSS}	V_{DS}=110V,V_{GS}=0V	-	-	1	μA
Gate-Body Leakage Current	I_{GSS}	V_{GS}=±20V,V_{DS}=0V	-	-	±100	nA
On Characteristics (Note 3)						
Gate Threshold Voltage	$V_{GS(th)}$	V_{DS}=V_{GS},I_D=250μA	0.8	1.7	2.5	V
Drain-Source On-State Resistance	$R_{DS(ON)}$	V_{GS}=10V, I_D=2A	-	107	124	mΩ
Drain-Source On-State Resistance	$R_{DS(ON)}$	V_{GS}=4.5V, I_D=1A	-	131	162	mΩ
Forward Transconductance	g_{FS}	V_{DS}=5V,I_D=1A	1	-	-	S
Dynamic Characteristics (Note4)						
Input Capacitance	C_{lss}	V_{DS}=50V,V_{GS}=0V, F=1.0MHz	-	190	-	PF
Output Capacitance	C_{oss}		-	22	-	PF
Reverse Transfer Capacitance	C_{rss}		-	13	-	PF
Switching Characteristics (Note 4)						
Turn-on Delay Time	$t_{d(on)}$	V_{DD}=50V,I_D=1.3A,R_L=39Ω V_{GS}=10V,R_G=1Ω	-	6	-	nS
Turn-on Rise Time	t_r		-	10	-	nS
Turn-Off Delay Time	$t_{d(off)}$		-	10	-	nS
Turn-Off Fall Time	t_f		-	6	-	nS
Total Gate Charge	Q_g	V_{DS}=50V,I_D=1.3A, V_{GS}=10V	-	5.2		nC
Gate-Source Charge	Q_{gs}		-	0.75	-	nC
Gate-Drain Charge	Q_{gd}		-	1.4	-	nC
Drain-Source Diode Characteristics						
Diode Forward Voltage (Note 3)	V_{SD}	V_{GS}=0V,I_S=1.3A	-	-	1.2	V
Diode Forward Current (Note 2)	I_S		-	-	2	A

WildGoose Semiconductor

Notes:

1. Repetitive Rating: Pulse width limited by maximum junction temperature.
2. Surface Mounted on FR4 Board, t ≤ 10 sec.
3. Pulse Test: Pulse Width ≤ 300μs, Duty Cycle ≤ 2%.
4. Guaranteed by design, not subject to production

Typical Electrical and Thermal Characteristics (Curves)

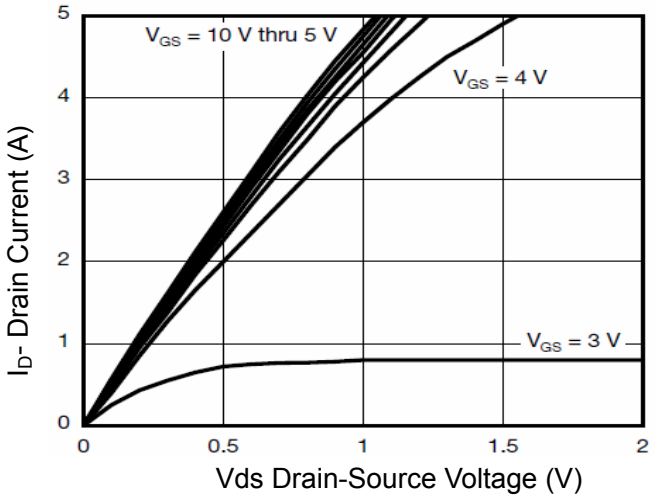

Figure 1 Output Characteristics

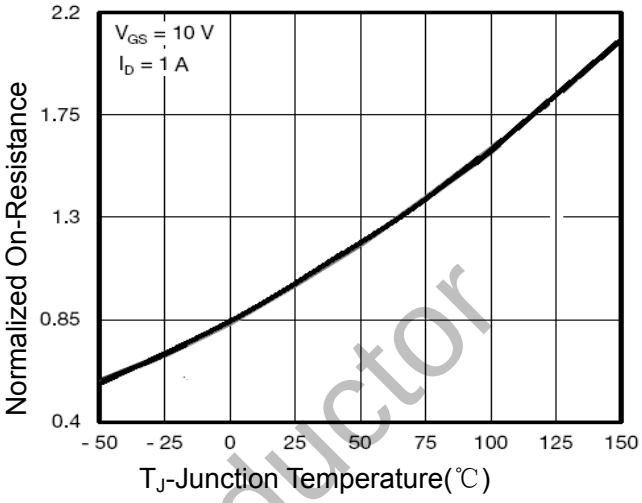

Figure 4 Rdson-JunctionTemperature

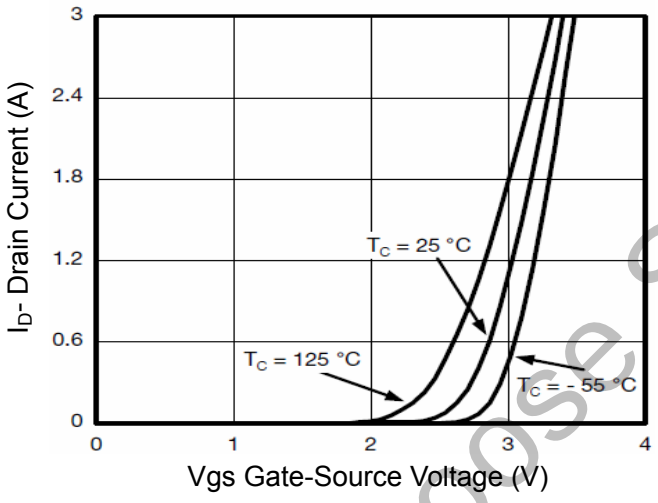

Figure 2 Transfer Characteristics

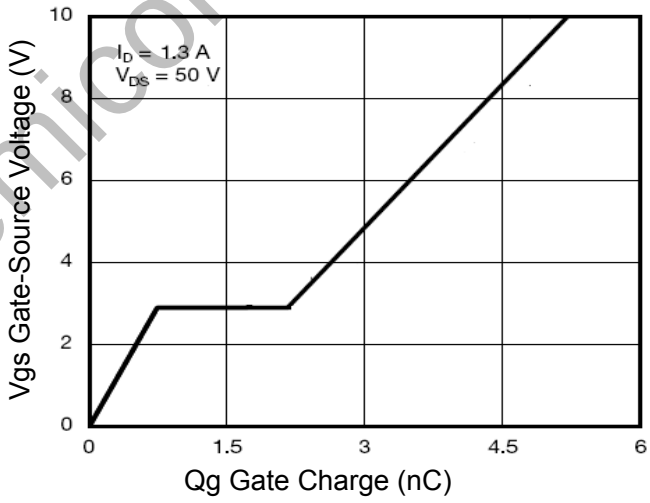

Figure 5 Gate Charge

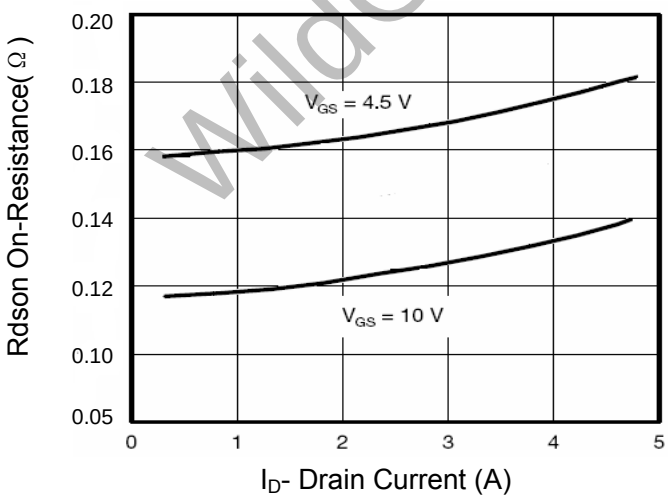

Figure 3 Rdson- Drain Current

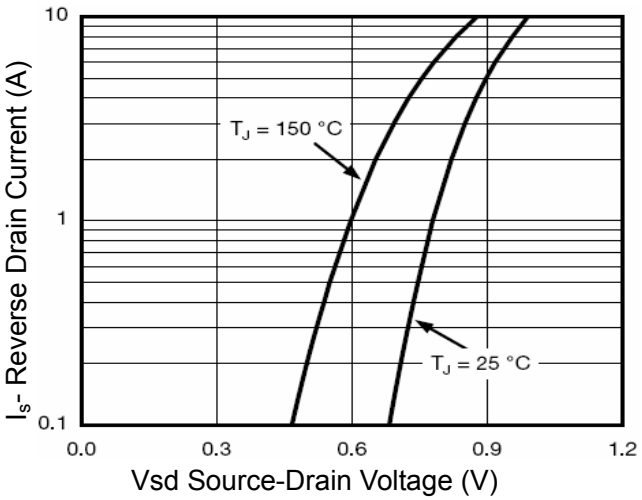

Figure 6 Source- Drain Diode Forward

WildGoose Semiconductor

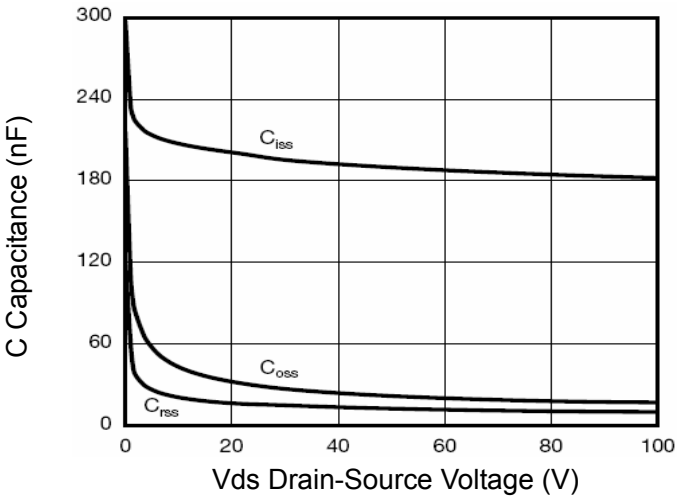

Figure 7 Capacitance vs Vds

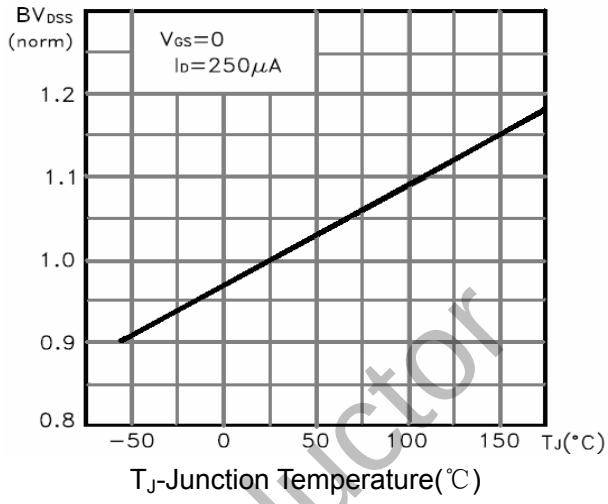

Figure 9 BV_{DSS} vs Junction Temperature

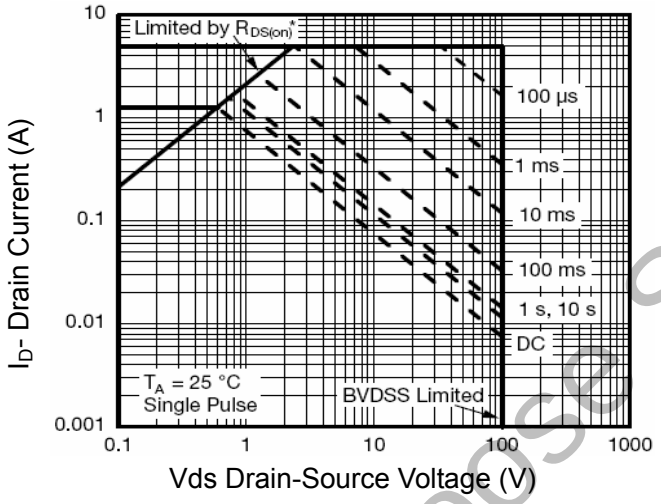

Figure 8 Safe Operation Area

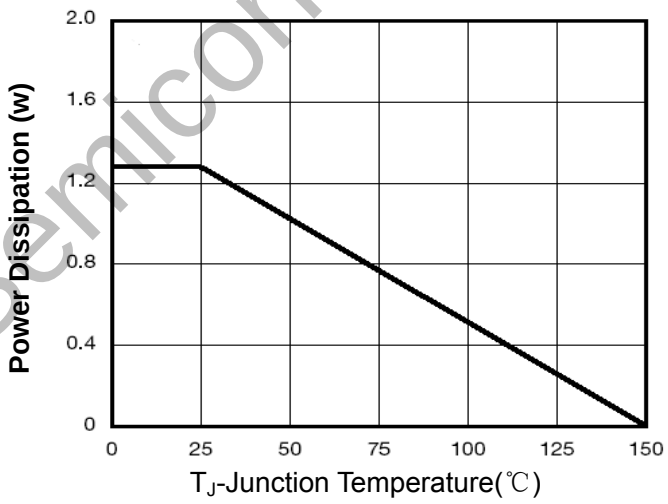

Figure 10 Power De-ratin

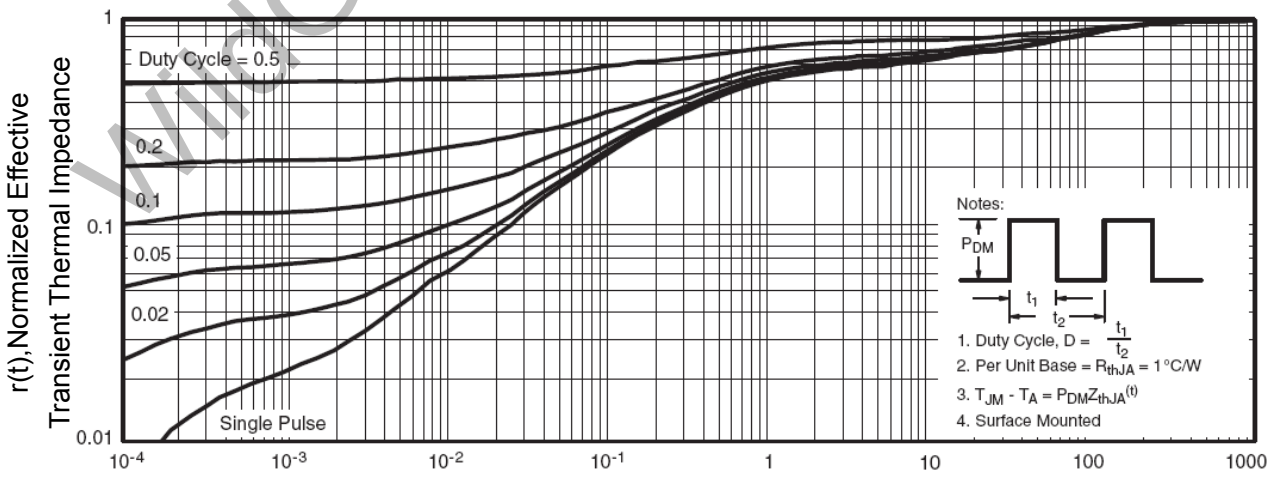

Figure 11 Normalized Maximum Transient Thermal Impedance

WildGoose Semiconductor

Test Circuit

1）E_{AS} test circuit

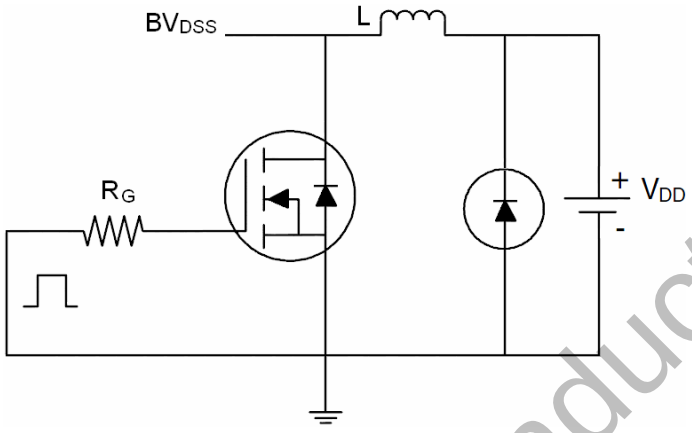

2）Gate charge test circuit

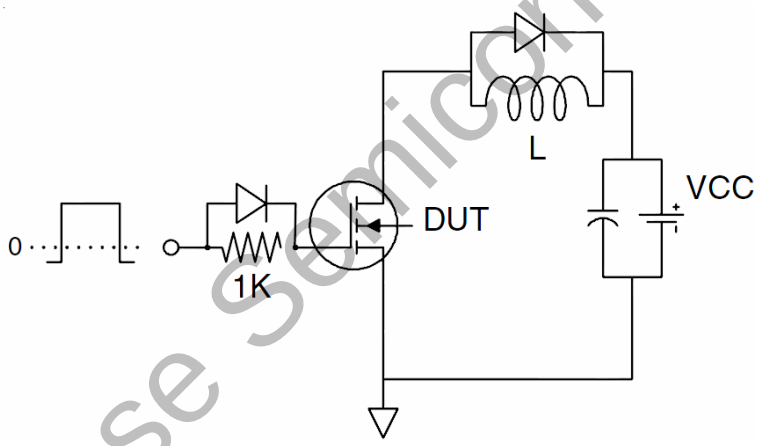

3）Switch Time Test Circuit

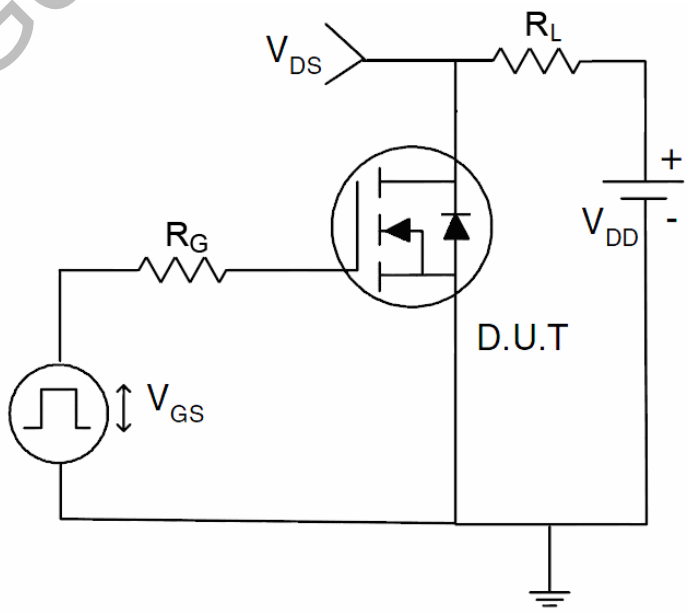

WildGoose Semiconductor

Package Dimension

SOT-23

Unit: mm

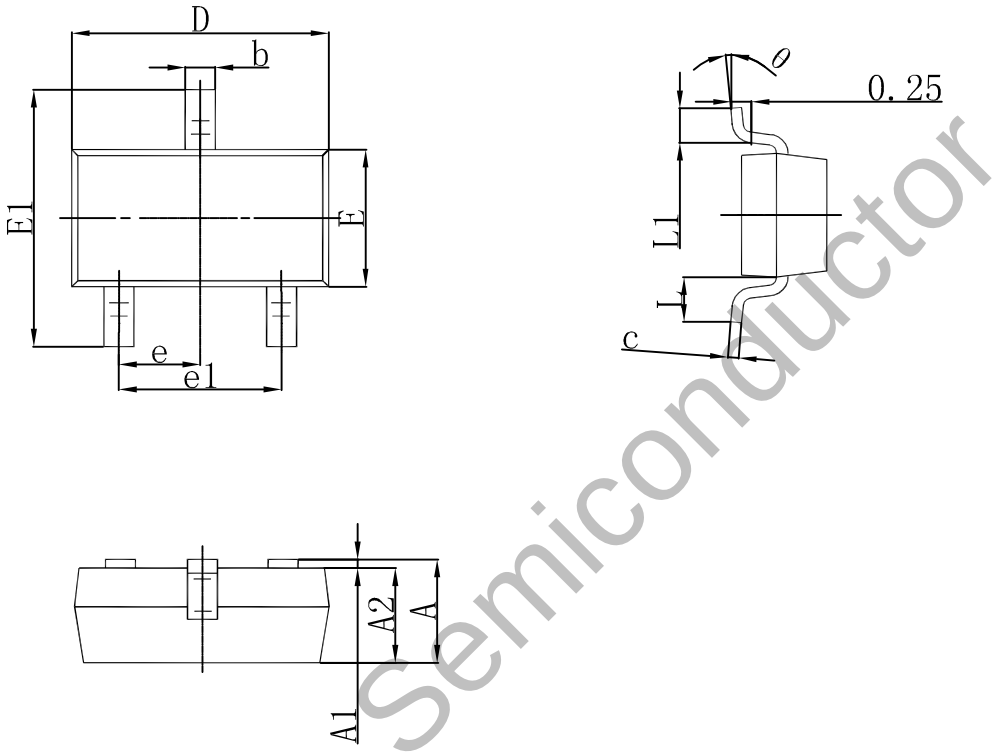

WildGoose Semiconductor

Symbol	Dimensions In Millimeters		Dimensions In Inches	
	Min	Max	Min	Max
A	0.900	1.150	0.035	0.045
A1	0.000	0.100	0.000	0.004
A2	0.900	1.050	0.035	0.041
b	0.300	0.500	0.012	0.020
c	0.080	0.150	0.003	0.006
D	2.800	3.000	0.110	0.118
E	1.200	1.400	0.047	0.055
E1	2.250	2.550	0.089	0.100
e	0.950 TYP		0.037 TYP	
e1	1.800	2.000	0.071	0.079
L	0.550 REF		0.022 REF	
L1	0.300	0.500	0.012	0.020
θ	0°	8°	0°	8°