WGN010P40

Features:

- ☐ Advanced Trench Technology
- ☐ Ultra Low Gate Charge:Qg=68nC (Typ.)
- ☐ VDSS=-40V, ID=-35A
- ☐ Rds(on):8.7mΩ(Typ.) @VG=-10V
- ☐ 100% Avalanche Tested

PDFN5X6

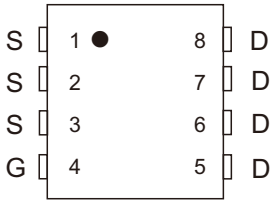

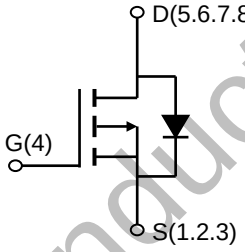

Absolute Maximum Ratings (Ta=25℃ unless otherwise noted)

Parameter	Symbol		Value	Unit
Drain-Source Voltage	V_{DSS}		-40	V
Drain Current	I_D	Tj=25℃	-35	A
		Tj=100℃	-23	
Gate-Source Voltage	V_{GSS}		±20	V
Single Pulse Avalanche Energy (2)	E_{AS}		121	mJ
Pulsed Drain Current (1)	I_{DM}		-140	A
Power Dissipation (Tj=25℃)	P_D		38	W
Junction Temperature(Max)	T_j		150	℃
Storage Temperature	T_{stg}		-55~+175	℃
Maximum lead temperature for soldering purpose,1/8'from case for 5 seconds	TL		300	℃

Thermal Characteristics

Parameter	Symbol	Typ.	Max.	Unit
Thermal Resistance, Junction to Case	$R_{\theta JC}$	-	3.3	℃/W

WildGoose Semiconductor

Electrical Characteristics (T_J=25℃ unless otherwise specified)

Symbol	Parameter	Test Condition	Min.	Typ.	Max.	Units
Off Characteristic						
$V_{(BR)DSS}$	Drain-Source Breakdown Voltage	V_{GS}=0V, I_D= -250μA	-40	-	-	V
I_{DSS}	Zero Gate Voltage Drain Current	V_{DS}= -40V, V_{GS}=0V	-	-	-1	μA
I_{GSS}	Gate to Body Leakage Current	V_{DS}=0V, V_{GS}= ±20V	-	-	±100	nA
On Characteristics						
$V_{GS(th)}$	Gate Threshold Voltage	V_{DS}=V_{GS}, I_D= -250μA	-1.0	-1.5	-2.5	V
$R_{DS(on)}$	Static Drain-Source on-Resistance note3	V_{GS}= -10V, I_D= -20A	-	8.7	12.5	mΩ
		V_{GS}= -4.5V, I_D= -10A	-	10.5	21	
Dynamic Characteristics						
C_{iss}	Input Capacitance	V_{DS}= -20V, V_{GS}=0V, f=1.0MHz	-	3800	-	pF
C_{oss}	Output Capacitance		-	329	-	pF
C_{rss}	Reverse Transfer Capacitance		-	289	-	pF
Q_g	Total Gate Charge	V_{DS}= -20V, I_D= -20A, V_{GS}= -10V	-	68	-	nC
Q_{gs}	Gate-Source Charge		-	10	-	nC
Q_{gd}	Gate-Drain(“Miller”) Charge		-	14	-	nC
Switching Characteristics						
$t_{d(on)}$	Turn-on Delay Time	V_{DD}= -20V, I_D= -20A, V_{GS}= -10V, R_{GEN}=2.4Ω	-	10	-	ns
t_r	Turn-on Rise Time		-	82	-	ns
$t_{d(off)}$	Turn-off Delay Time		-	93	-	ns
t_f	Turn-off Fall Time		-	74	-	ns
Drain-Source Diode Characteristics and Maximum Ratings						
I_S	Maximum Continuous Drain to Source Diode Forward Current		-	-	-35	A
I_{SM}	Maximum Pulsed Drain to Source Diode Forward Current		-	-	-140	A
V_{SD}	Drain to Source Diode Forward Voltage	V_{GS}=0V, I_S= -35A	-	-0.8	-1.2	V
trr	Reverse Recovery Time	V_{GS}=0V, I_S= -35A, di/dt=100A/μs	-	20	-	ns
Qrr	Reverse Recovery Charge		-	13	-	nC

Notes:1. Repetitive Rating: Pulse Width Limited by Maximum Junction Temperature

2. EAS condition: T_J= 25℃, V_{DD}= -20V, V_G= -10V, L= 0.5mH, R_G= 25Ω, I_{AS}= -22A

3. Pulse Test: Pulse Width≤300μs, Duty Cycle≤2%

WidGoose Semiconductor

Typical Performance Characteristics

Figure1: Output Characteristics

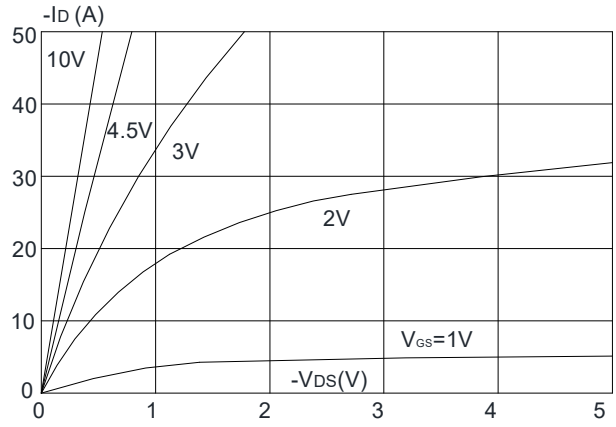

Figure 2: Typical Transfer Characteristics

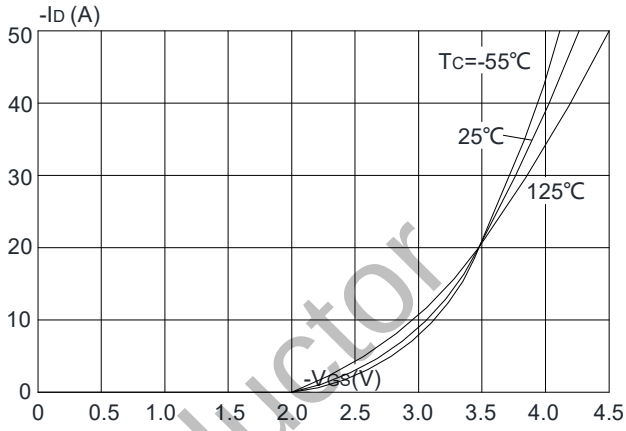

Figure 3: On-resistance vs. Drain Current

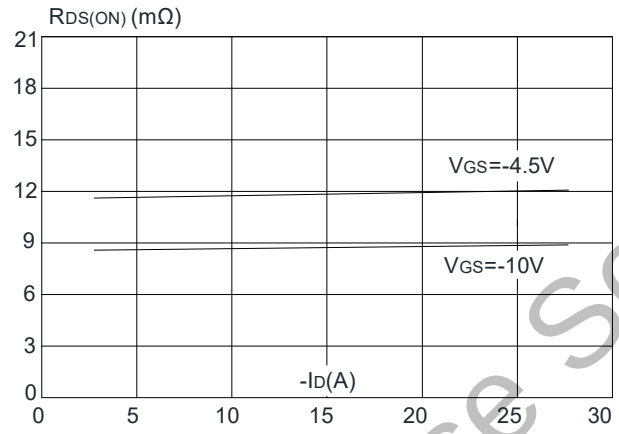

Figure 4: Body Diode Characteristics

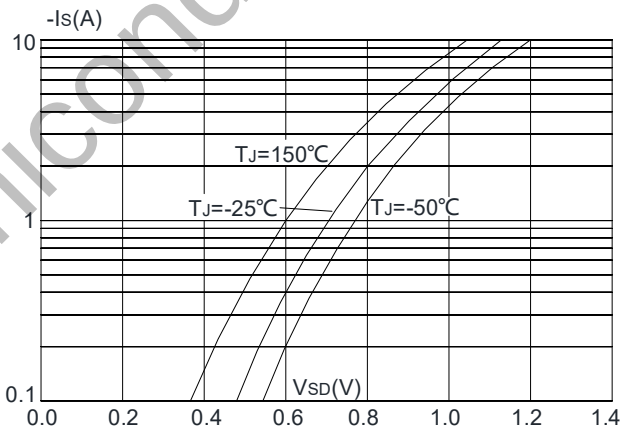

Figure 5: Gate Charge Characteristics

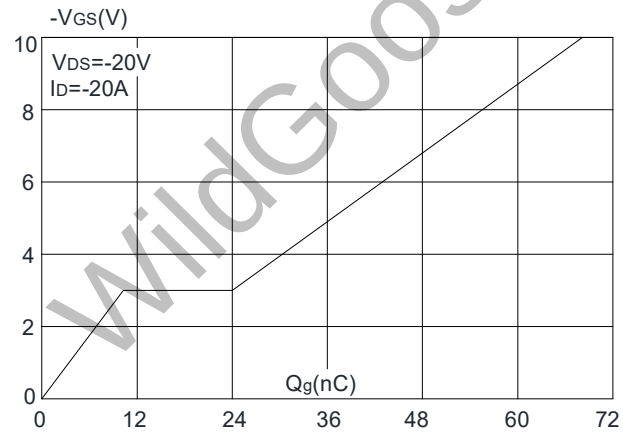

Figure 6: Capacitance Characteristics

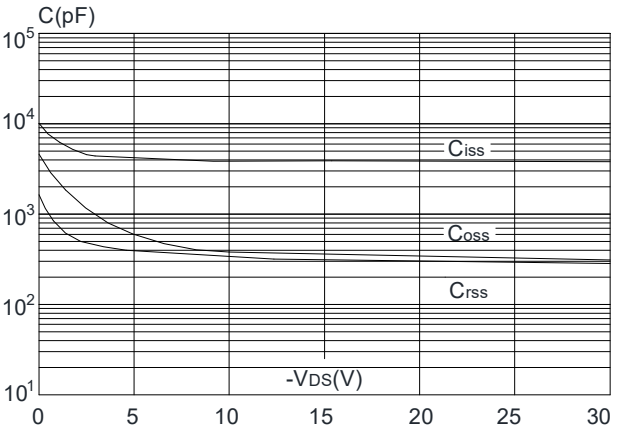

WildGoose Semiconductor

Figure 7: Normalized Breakdown Voltage vs. Junction Temperature

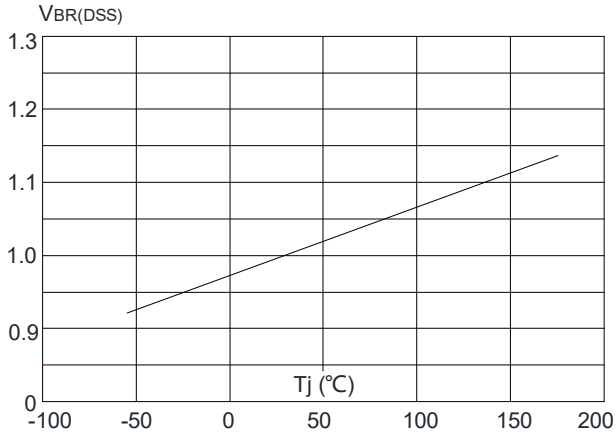

Figure 8: Normalized on Resistance vs. Junction Temperature

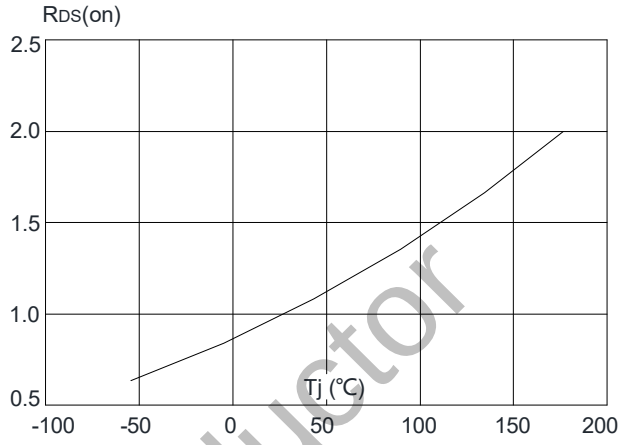

Figure 9: Maximum Safe Operating Area

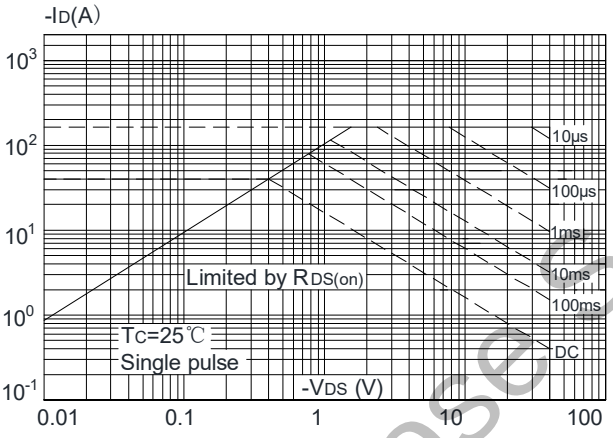

Figure 10: Maximum Continuous Drain Current vs. Case Temperature

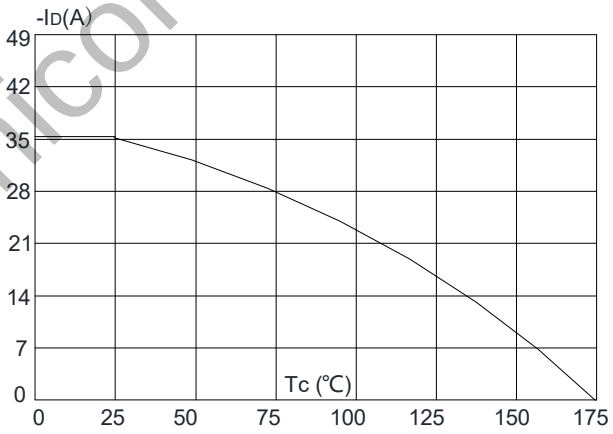

Figure.11: Maximum Effective Transient Thermal Impedance, Junction-to-Case

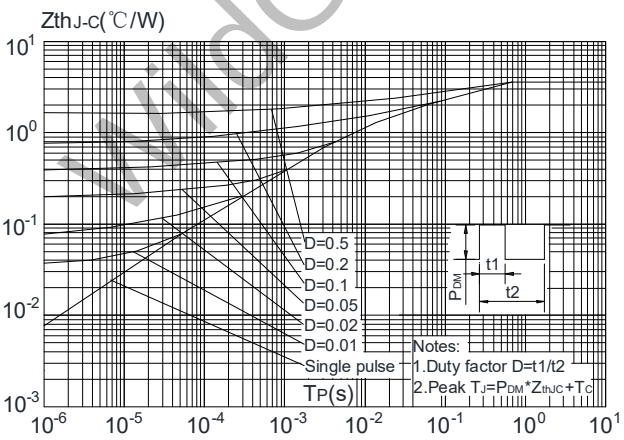

WGGoodSemiconductor

Test Circuit

Gate Charge Test Circuit & Waveform

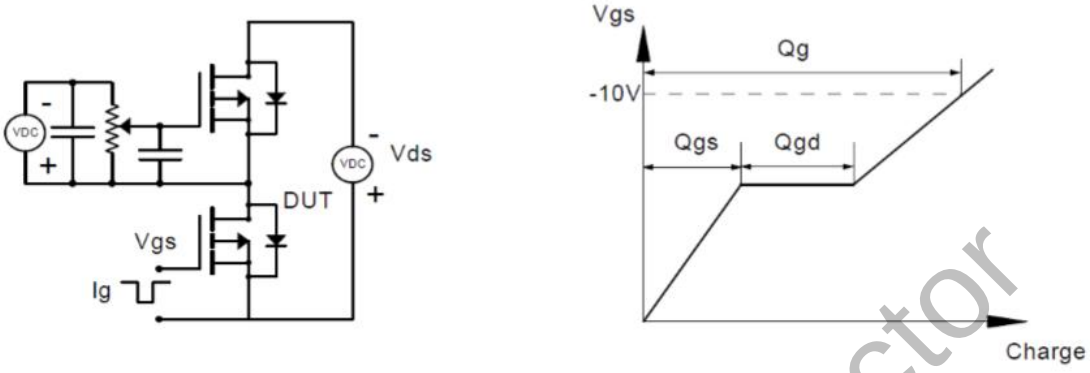

Resistive Switching Test Circuit & Waveforms

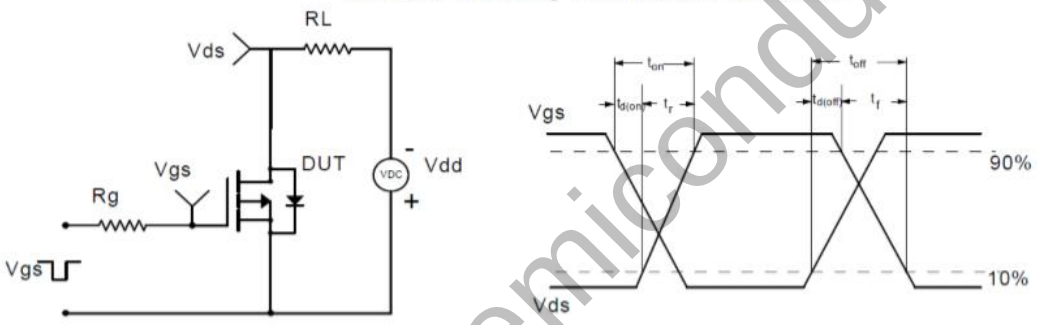

Unclamped Inductive Switching (UIS) Test Circuit & Waveforms

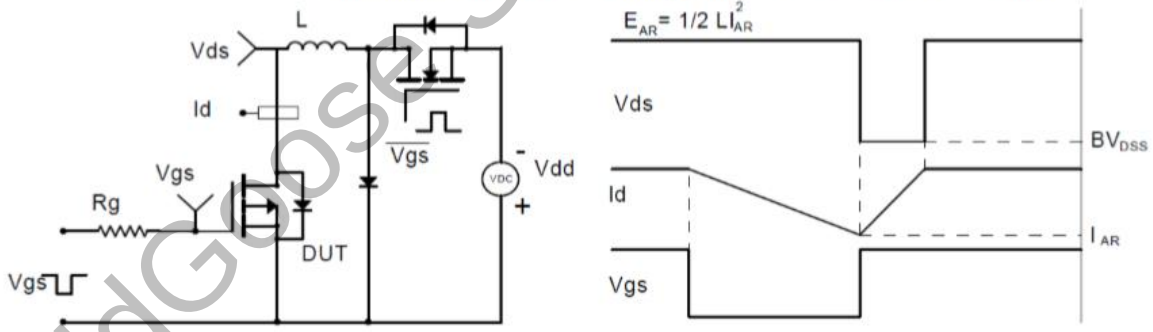

Diode Recovery Test Circuit & Waveforms

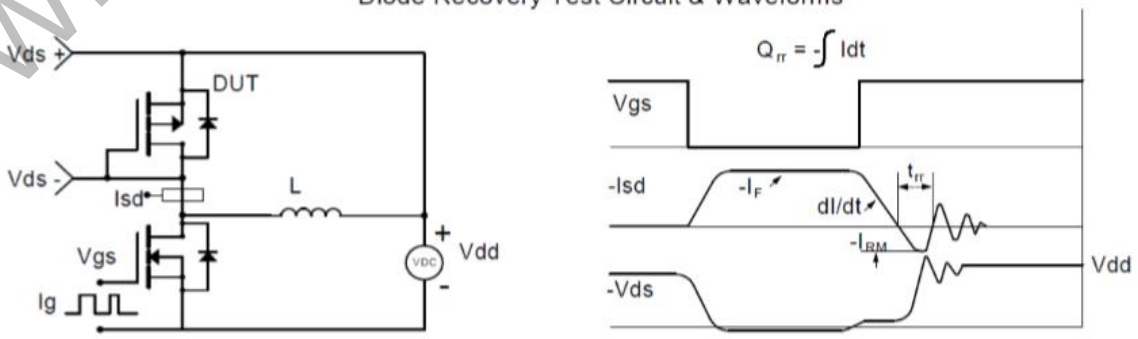

WildGoose Semiconductor

Package Dimension

PDFN5X6-8L（模一）

Unit:mm

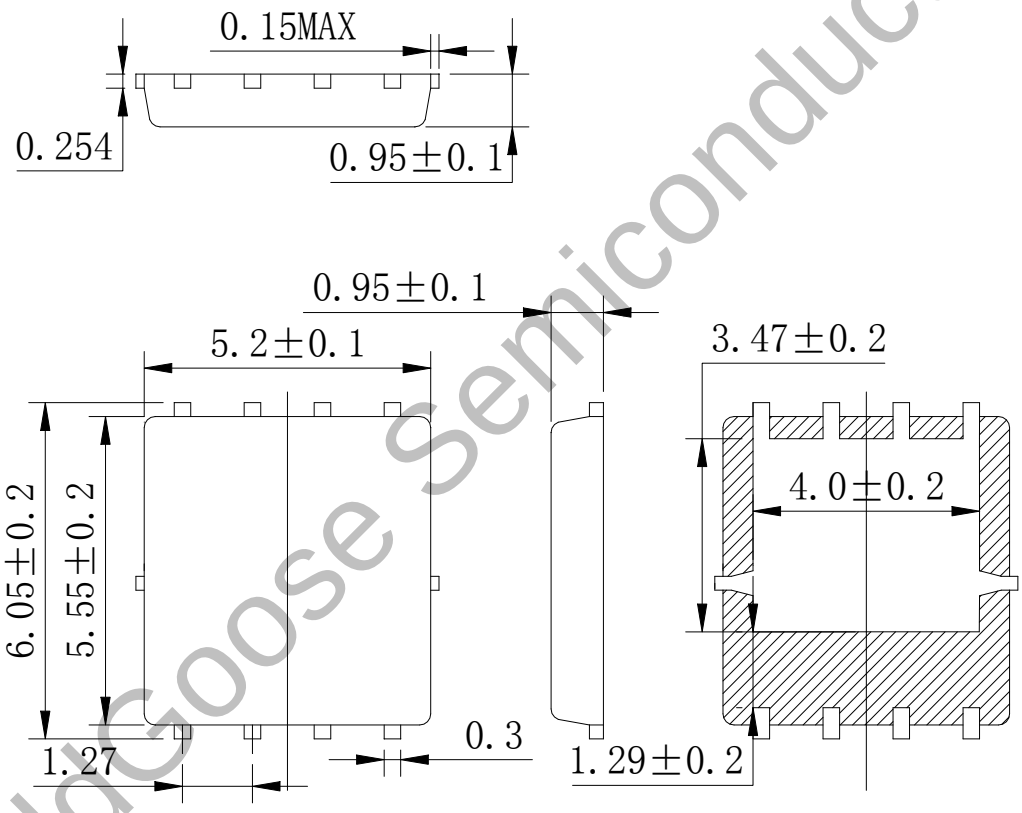

WildGoose Semiconductor

Package Dimension

PDFN5X6-8L（模二）

Unit:mm

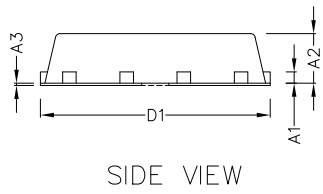

SIDE VIEW

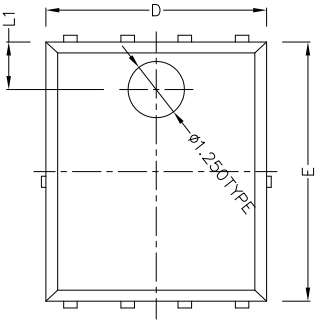

TOP VIEW

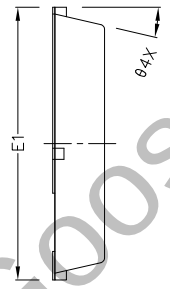

SIDE VIEW

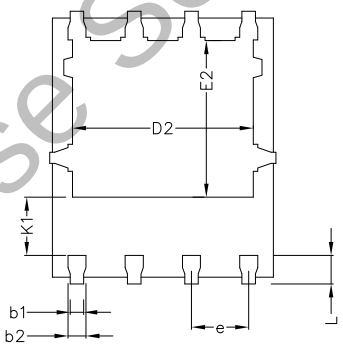

BOTTOM VIEW
OPTION 1

COMMON DIMENSIONS
(UNITS OF MEASURE IS mm)

	MIN	NORMAL	MAX
A1		0.254 BSC	
A2	1.000	1.100	1.200
A3	0.005	–	0.020
b1	0.250	0.300	0.350
b2	0.350	0.400	0.450
D	4.600	4.900	5.000
D1	5.000	5.100	5.200
D2	3.910	4.010	4.110
D3	1.605	1.705	1.805
E	5.650	5.750	5.850
E1	5.950	6.050	6.150
E2	3.375	3.475	3.575
e		1.270 TYPE	
L	0.530	0.630	0.730
L1		1.00REF	
θ		13° TYPE	
K		0.600 REF	
K1		1.235 REF	

WildGoose Semiconductor