WGD20N03

Features:

- ☐ Low Intrinsic Capacitances.
- ☐ Excellent Switching Characteristics.
- ☐ Extended Safe Operating Area.
- ☐ Unrivalled Gate Charge :Qg=19.5 nC (Typ.).
- ☐ BVDSS=30V,I_D=20A
- ☐ R_{DS}(on) : 9.6mΩ (Max) @V_G=10V
- ☐ 100% Avalanche Tested

TO-252

RoHS COMPLIANT

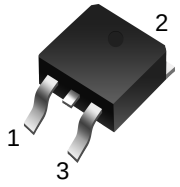

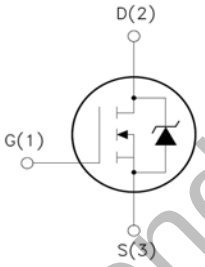

1.Gate (G)
2.Drain (D)
3.Source (S)

Absolute Maximum Ratings (T_C=25℃unless otherwise noted)

Parameter	Symbol	Limit	Unit
Drain-Source Voltage	V_{DSS}	30	V
Gate-Source Voltage	V_{GSS}	±20	V
Drain Current-Continuous	I_D	20	A
Drain Current-Continuous(T_C=100℃)	I_D (100℃)	14	A
Pulsed Drain Current	I_{DM}	60	A
Maximum Power Dissipation	P_D	33	W
Derating factor		0.27	W/℃
Single pulse avalanche energy (Note 5)	E_{AS}	72	mJ
Operating Junction and Storage Temperature Range	T_J,T_{STG}	-55 To 175	℃

Thermal Characteristic

Thermal Resistance,Junction-to-Case (Note 2)	$R_{\theta JC}$	3.8	℃/W

WildGoose Semiconductor

Electrical Characteristics (T_C=25℃unless otherwise noted)

Parameter	Symbol	Condition	Min	Typ	Max	Unit
Off Characteristics						
Drain-Source Breakdown Voltage	BV_{DSS}	V_{GS}=0V I_D=250μA	30	-	-	V
Zero Gate Voltage Drain Current	I_{DSS}	V_{DS}=30V,V_{GS}=0V	-	-	1	μA
Gate-Body Leakage Current	I_{GSS}	V_{GS}=±20V,V_{DS}=0V	-	-	±100	nA
On Characteristics (Note 3)						
Gate Threshold Voltage	V_{GSS}	V_{DS}=V_{GS},I_D=250μA	1.0	1.6	2.2	V
Drain-Source On-State Resistance	$R_{DS(ON)}$	V_{GS}=10V, I_D=20A	-	9.6	13	mΩ
		V_{GS}=4.5V, I_D=10A	-	14	21	mΩ
Forward Transconductance	g_{FS}	V_{DS}=5V,I_D=20A	26	-	-	S
Dynamic Characteristics (Note4)						
Input Capacitance	C_{lss}	V_{DS}=15V,V_{GS}=0V, F=1.0MHz	-	865	-	PF
Output Capacitance	C_{oss}		-	135	-	PF
Reverse Transfer Capacitance	C_{rss}		-	87	-	PF
Switching Characteristics (Note 4)						
Turn-on Delay Time	$t_{d(on)}$	V_{DD}=15V, R_L=0.75Ω V_{GS}=10V,R_G=3Ω	-	5	-	nS
Turn-on Rise Time	t_r		-	12	-	nS
Turn-Off Delay Time	$t_{d(off)}$		-	19	-	nS
Turn-Off Fall Time	t_f		-	6	-	nS
Total Gate Charge	Q_g	V_{DS}=15V,I_D=10A, V_{GS}=10V	-	19.5		nC
Gate-Source Charge	Q_{gs}		-	3		nC
Gate-Drain Charge	Q_{gd}		-	4.1		nC
Drain-Source Diode Characteristics						
Diode Forward Voltage (Note 3)	V_{SD}	V_{GS}=0V,I_S=20A	-		1.2	V
Diode Forward Current (Note 2)	I_S		-	-	20	A
Reverse Recovery Time	t_{rr}	TJ = 25°C, IF =20A di/dt = 100A/μs (Note3)	-	19	-	nS
Reverse Recovery Charge	Qrr		-	10	-	nC
Forward Turn-On Time	t_{on}	Intrinsic turn-on time is negligible (turn-on is dominated by LS+LD)				

WildGoose Semiconductor

Notes:

1. Repetitive Rating: Pulse width limited by maximum junction temperature.
2. Surface Mounted on FR4 Board, t ≤ 10 sec.
3. Pulse Test: Pulse Width ≤ 300μs, Duty Cycle ≤ 2%.
4. Guaranteed by design, not subject to production
5. EAS condition：Tj=25℃,V_{DD}=30V,V_G=10V,L=0.5mH,Rg=25Ω

Typical Characteristics

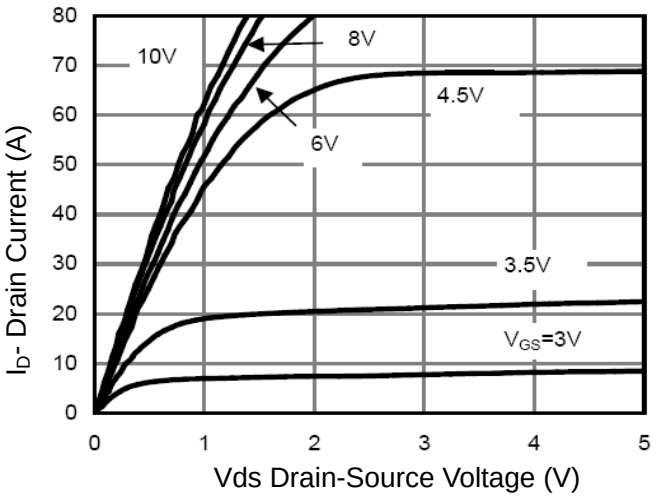

Figure 1 Output Characteristics

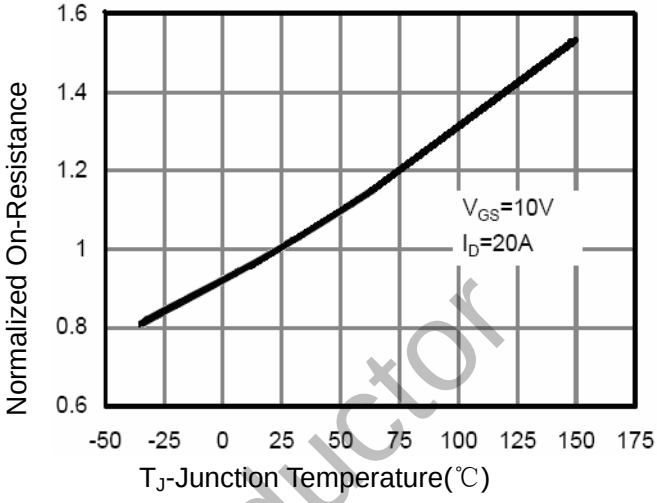

Figure 4 Rdson-Junction Temperature

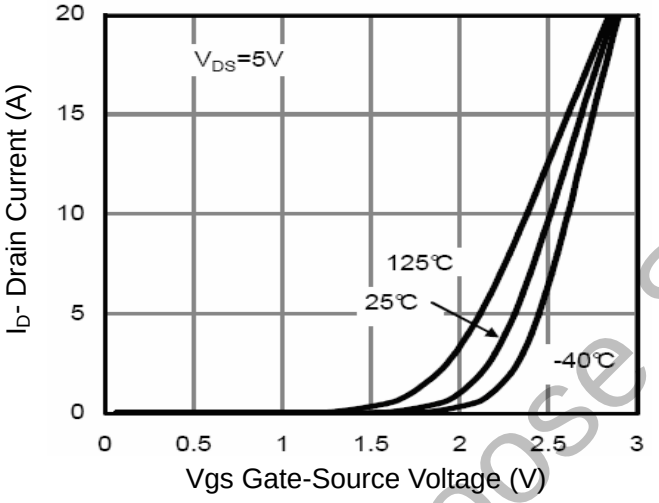

Figure 2 Transfer Characteristics

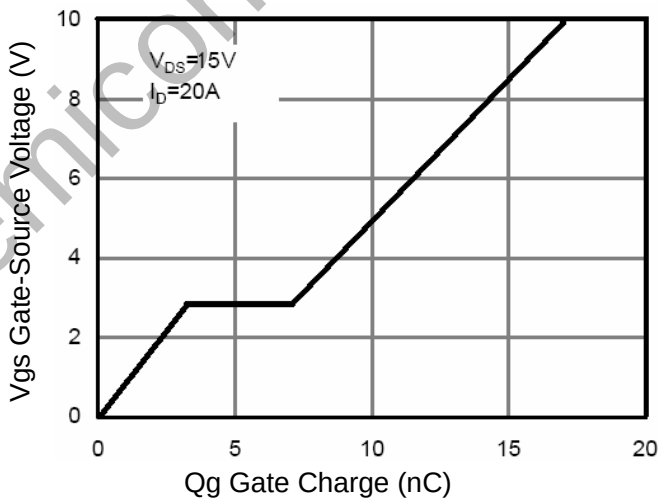

Figure 5 Gate Charge

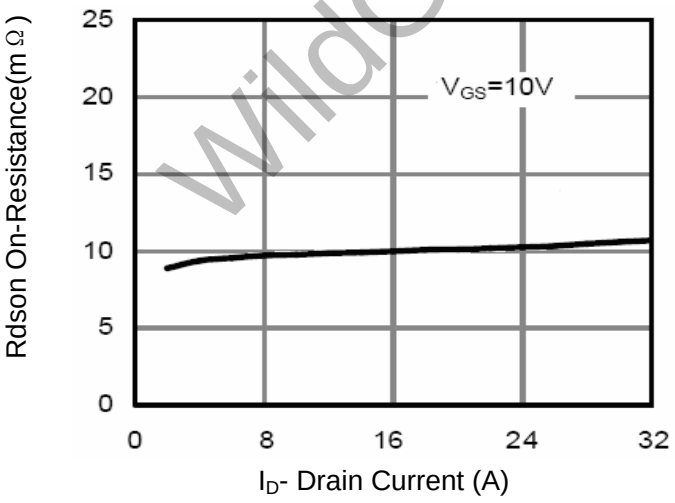

Figure 3 Rdson- Drain Current

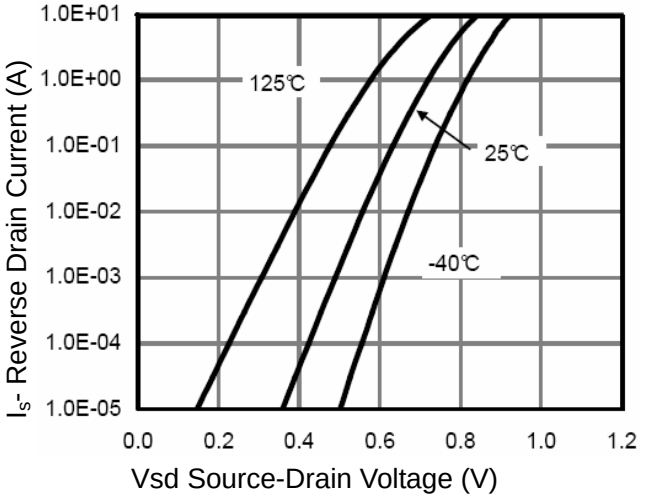

Figure 6 Source- Drain Diode Forward

WildGoose Semiconductor

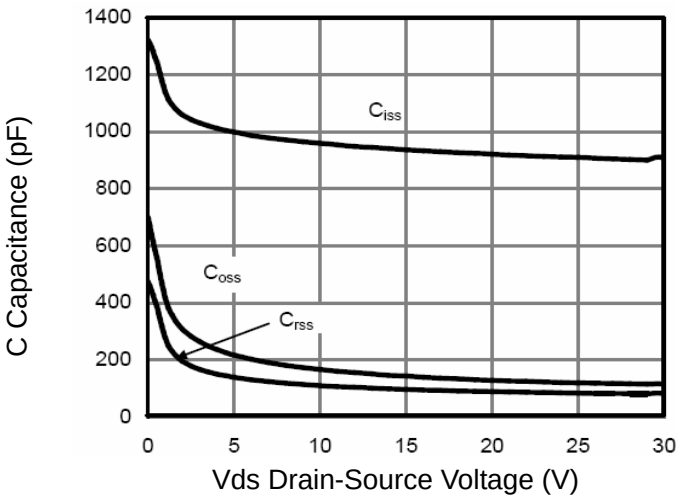

Figure 7 Capacitance vs Vds

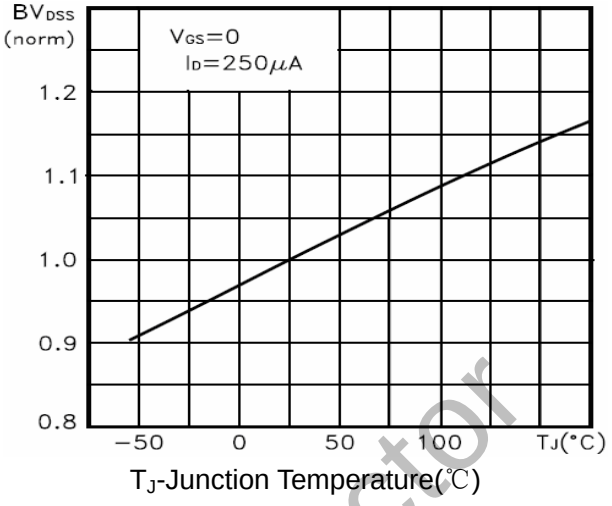

Figure 9 BV_{DSS} vs Junction Temperature

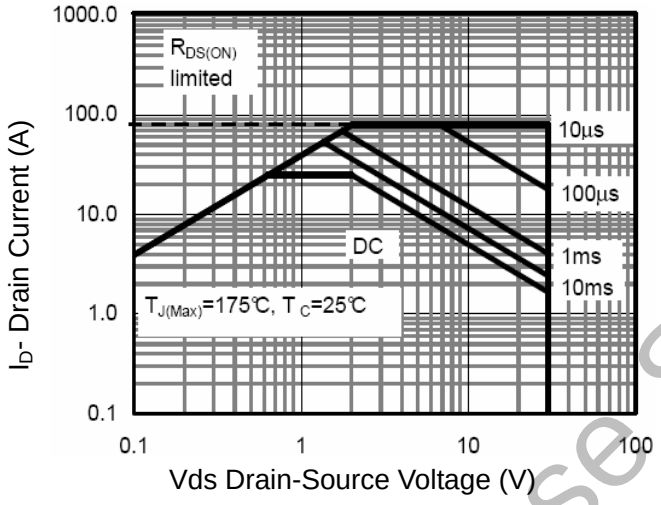

Figure 8 Safe Operation Area

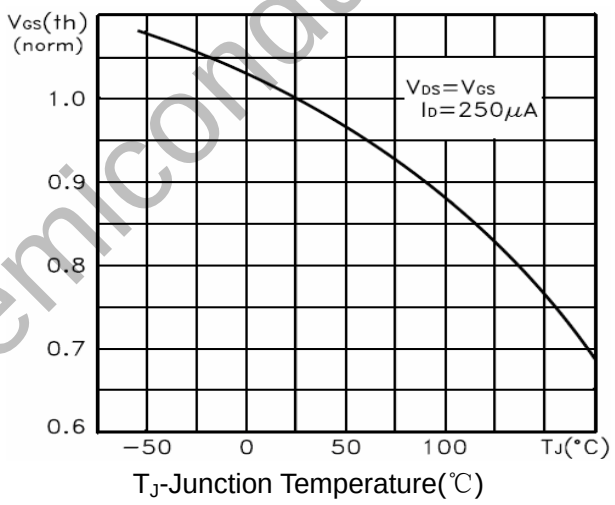

Figure 10 $V_{GS(th)}$ vs Junction Temperature

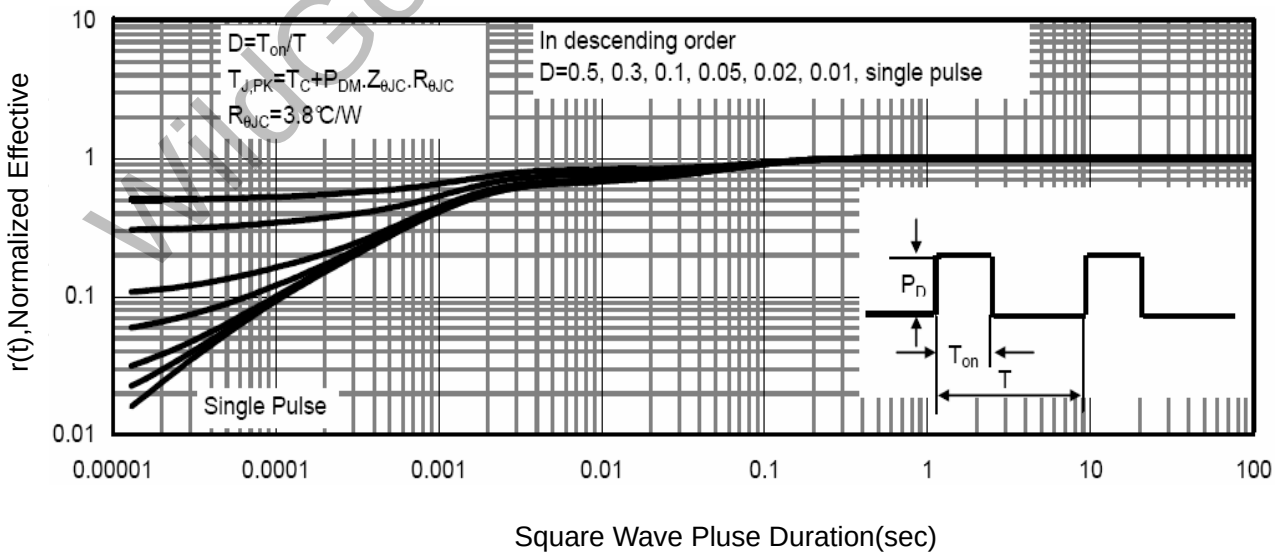

Figure 11 Normalized Maximum Transient Thermal Impedance

WillGoose Semiconductor

Test Circuit

1) E_{AS} test Circuit

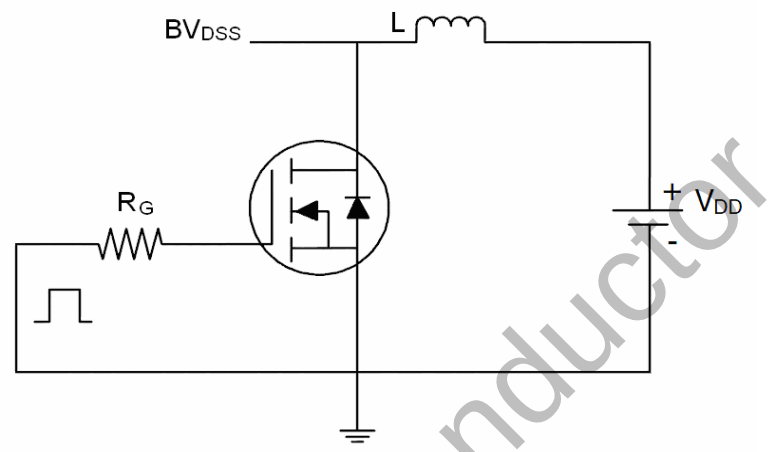

2) Gate charge test Circuit

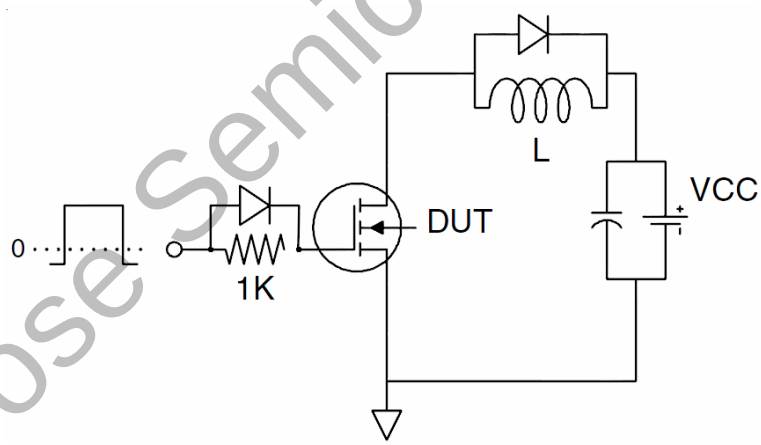

3) Switch Time Test Circuit

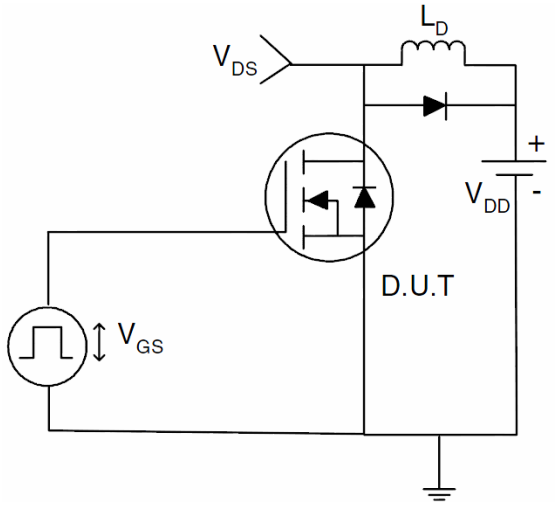

WildGoose Semiconductor

Package Dimension

TO-252

Unit: mm

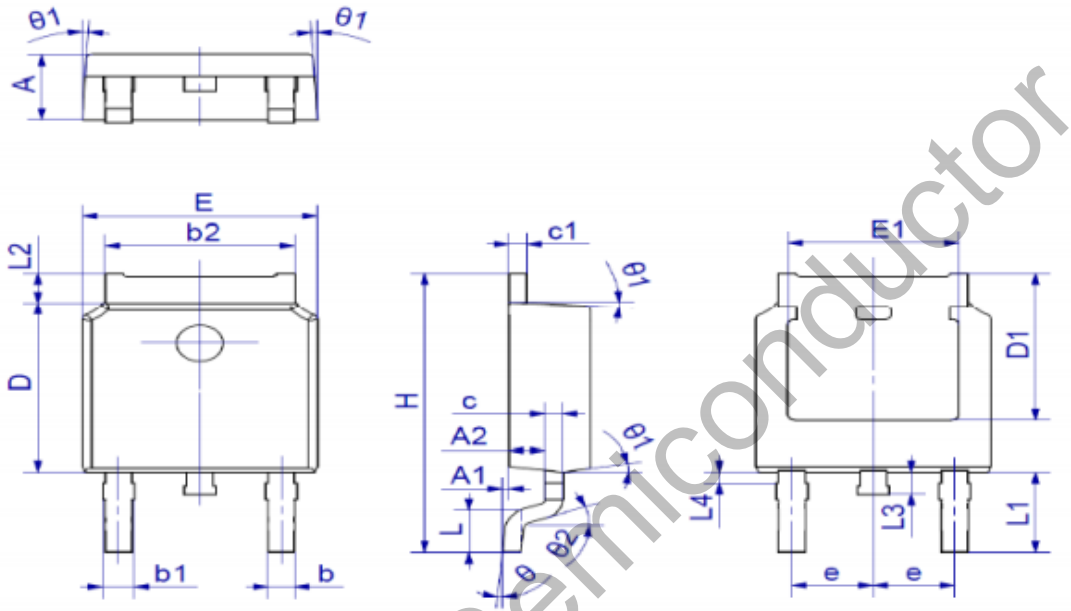

Symbol	Dimensions In Millimeters		Dimensions In Inches	
	Min.	Max.	Min.	Max.
A	2.10	2.50	0.083	0.098
A1	0	0.15	0.000	0.006
A2	0.76	1.36	0.030	0.054
b	0.61	0.85	0.024	0.033
b1	0.71	0.91	0.028	0.036
b2	5.04	5.64	0.198	0.222
c	0.508 TYP.		0.02 TYP.	
c1	0.508 TYP.		0.02 TYP.	
D	5.8	6.3	0.228	0.248
D1	5	5.6	0.197	0.220
E	6.3	6.9	0.248	0.272
E1	4.55	5.15	0.179	0.203
e	2.286 TYP.		0.09 TYP.	
H	9.65	10.4	0.380	0.409
L	1.4	1.7	0.055	0.067
L1	2.90 REF.		0.114 REF.	
L2	0.75	1.35	0.030	0.053
L3	0.6	1.2	0.024	0.047
θ	0°	10°	0°	10°
θ1	5°	9°	5°	9°
θ2	25° REF.		25° REF.	

关键尺寸									
A	A1	b	D	E	E1	e	H	D	L1

WidGoose Semiconductor