ROHS Compliant

MAPX	MODIFICATION	DATE	DRAW	APPROVE

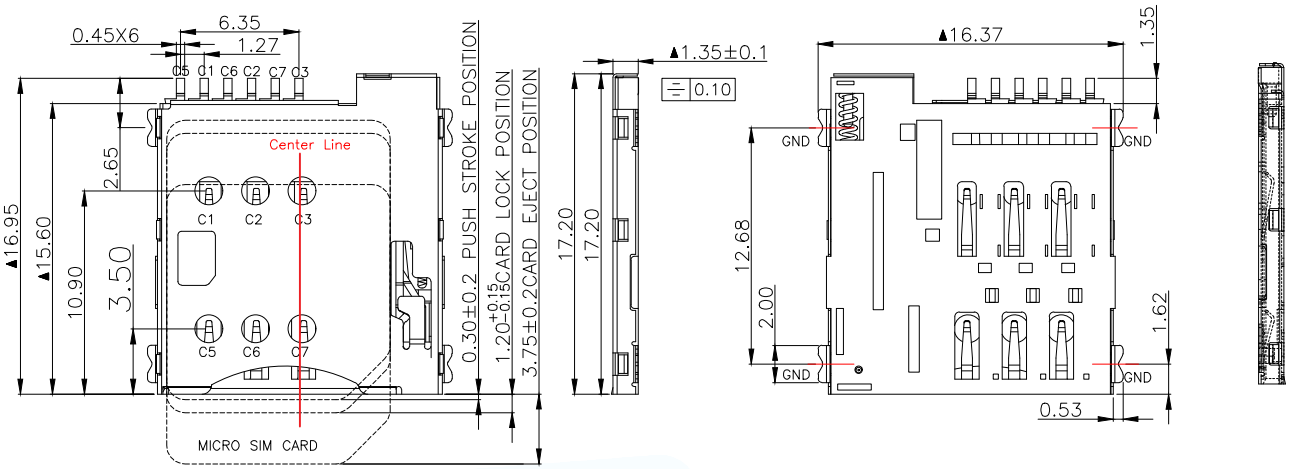

MATERIAL:
- INSULATOR: HIGH TERMERATURE THERMOPLASTIC,UL 94V-0
- CONTACT: COPPER ALLOY
- SHELL: SUS

PLATING:
- CONTACT: PLATED 50U" NI OVER ALL CONTACT AU 1U
- SHELL: PLATED 50U" NI OVERALL
- PLATED 1U" AU SELECTIVE CONTACT AREA

ELECTRICAL:
- CURRENT RATING: 0.5MA
- VOLTAGE RATING: 5V AC/DC
- AMBIENT TEMPERATURE RANGE: -40℃ ~ +85℃
- STORAGE TEMPERATURE RANGE: -40℃ ~ +85℃
- AMBIENT HUMIDITY RANGE: 95% R.H. MAX.
- CONTACT RESISTANCE: 100M MAX.Ω
- INSULATION RESISTANCE: 1000M MIN./500VDCΩ
- REFLOW PEAK TEMP: 260℃
- MATING CYCLES: 5000MIN INSERTIONS
- Salt spray time: 24H

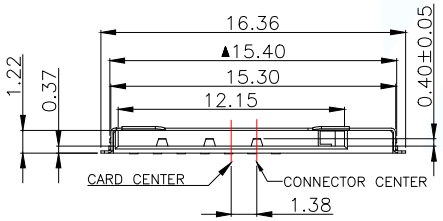

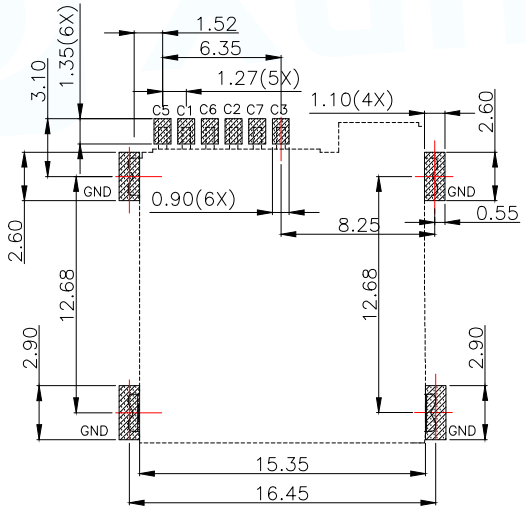

PAD AREA

KEEP OUT AREA

RECOMMENDED PCB LAYOUT

GENERAL TOLERANCE ±0.05

MICRO SIM CARD	
Pin No.	NAME
C1	VCC OF SIM
C2	RST OF SIM
C3	CLK OF SIM
C5	GND OF SIM
C6	VPP OF SIM
C7	I/O OF SIM
C4/C8	N/A

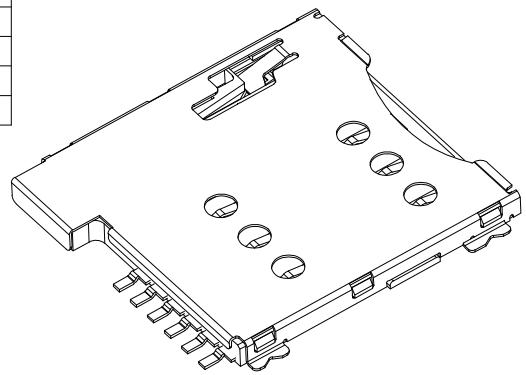

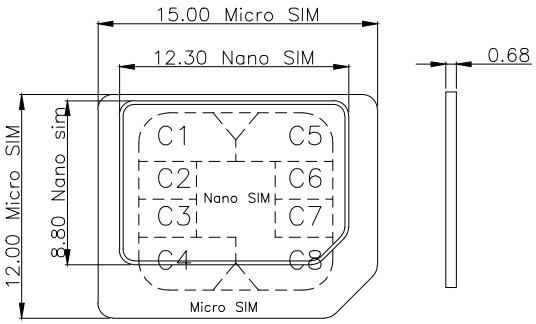

MANUFACTURE DWG	东莞市讯普电子科技有限公司 DongGuan XunPu Electronics Co,Ltd		
UNLESS OTHERWISE SPECIFED TOLERANCES		TITLE:MICRO SIM CARD PUSH PUSH 6PIN H1.35	
		PAR	SMC-202-ARP6
DECIMALS:	ANGLES:±1°	DWN	
X.X:±0.15		CHKD	
X.XX:±0.10		APVD	
X.XXX:±0.05	CUSTOMER COPY	SCALE1:1 / UNIT:MM	
		SIZE:A4	SHEET:1F1 / REV:A

ROHS Compliant

MAPX	MODIFICATION	DATE	DRAW	APPROVE

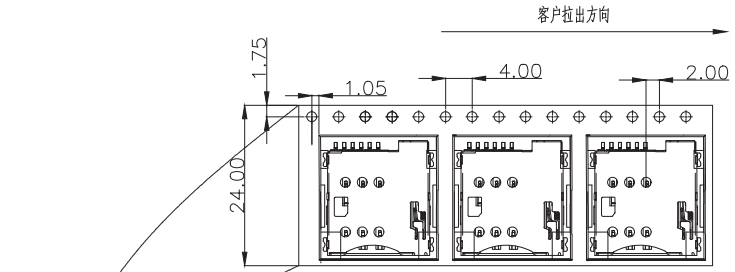

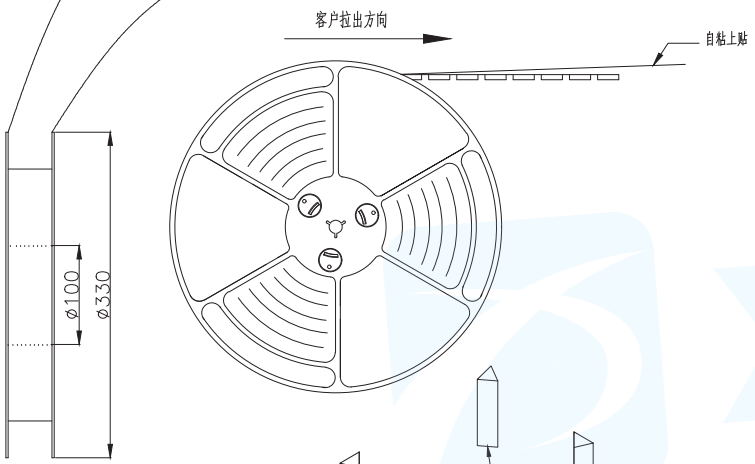

NOTES

1.每卷包装数量:1000PCS/每卷

2.卷带包装方式:

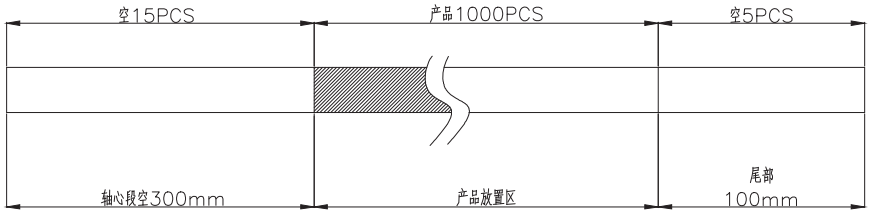

3.每箱包装数量:10000PCS/箱

4.纸箱350mm*350mm*440mm(内部尺寸),材质K=K

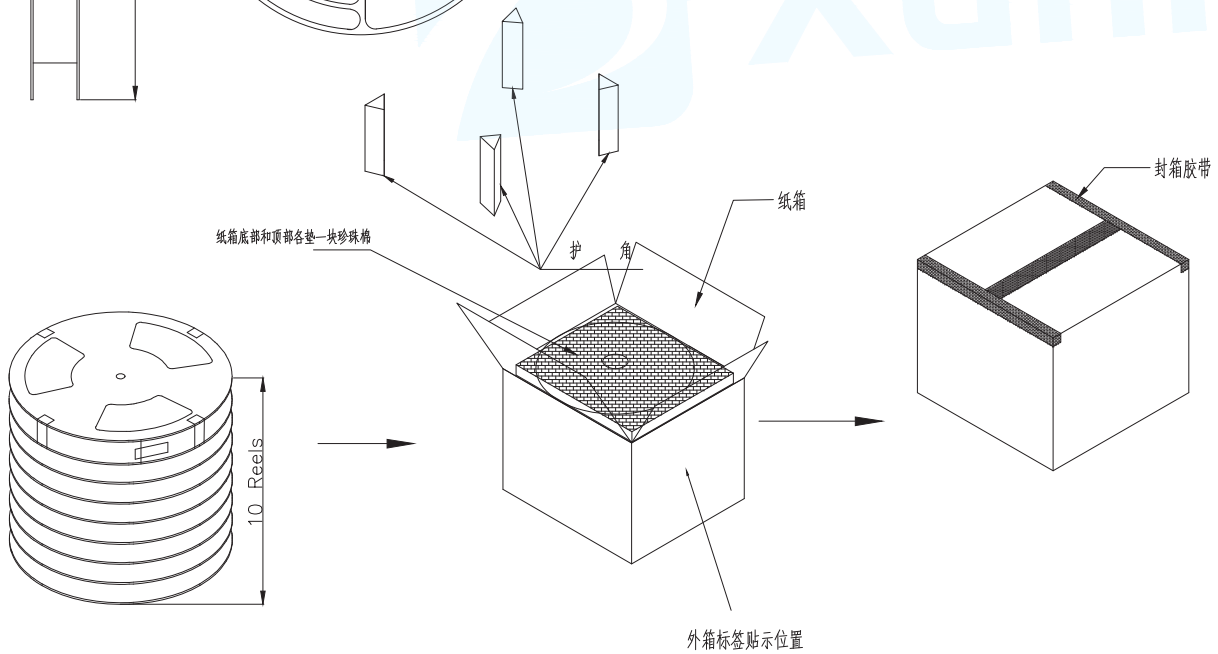

将10卷产品放入箱内

MANUFACTURE DWG	东莞市讯普电子科技有限公司 DongGuan XunPu Electronics Co,Ltd
UNLESS OTHERWISE SPECIFED TOLERANCES	TITLE:MICRO SIM CARD PUSH PUSH 6PIN H1.35 包装图
DECIMALS: ANGLES:±1°	PAR: SMC-202-ARP6
X.X:±0.15	DWN:
X.XX:±0.10	CHKD:
X.XXX:±0.05	APVD:
CUSTOMER COPY	SCALE1:1 UNIT:MM SIZE:A4 SHEET:1F1 REV:A