TACT SWITCH

碩方精密電子開關

www.Sofng.com

Operation: SMT+DIP/卧式　微型　轻触开关　[操作力可定制]

RoHS Compliant 2011/65/EU

Compliant Halogen Free

LTEM NO.: TS-1806E-C26Q (Series)

(L4.60mm×W2.3mm×H2.0mm　TACT-SWITCH)

表面贴装 SMT

侧向操作 INFEED

精密部品 NICETY

可靠 STABILIZE

適合環保 RoHS

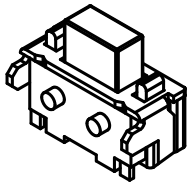

Material declaration

No.	NAME	Description
① A	嵌件	C5191R-H (t=0.15mm)镀银磷铜
② B	基座	LCP 30%(Buff)耐高温塑胶 UL94V-0
③ C	簧片	覆银&不锈钢 SUS304
④ D	拨柄	LCP 30%(Gray)耐高温塑胶 UL94V-0
⑤ E	盖板	H62 镀银黄铜(t=0.15mm)

Technical parameter

PROJECT \ LEVEL		A[better product]	B[average product]
Electrical Properties	Contact Rating	0.25A, 24V DC	
	Initial Contact Resistance	50mΩ max.	
	Insulation Resistance	100MΩ min.500V DC　Skey/PD：100MΩ min.300V DC	
	Withstand Voltage	300V AC for 1 minute	250 V AC for 1 minut
Durable Performance	There No Load	80,000 Cycles	60,000 Cycles
	Rated Load	65,000 Cycles	50,000 Cycles
Sterage temp.		-35℃～+75℃(Operating Temp:)	
Operating Force		1.6 / 2.6N. (1N.=100gram-force)	
Heat Rrsistance		IR Reflow:255℃,5sec.　Manual:350℃,3sec.	

CIRCUIT DIAGRAM

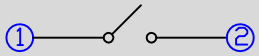

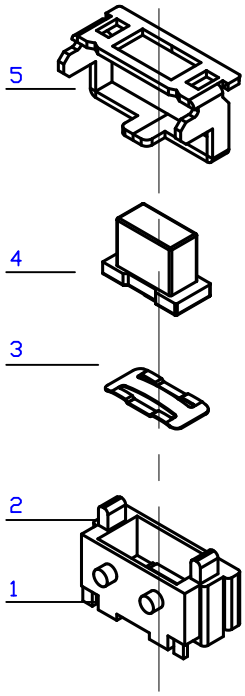

Unit:mm

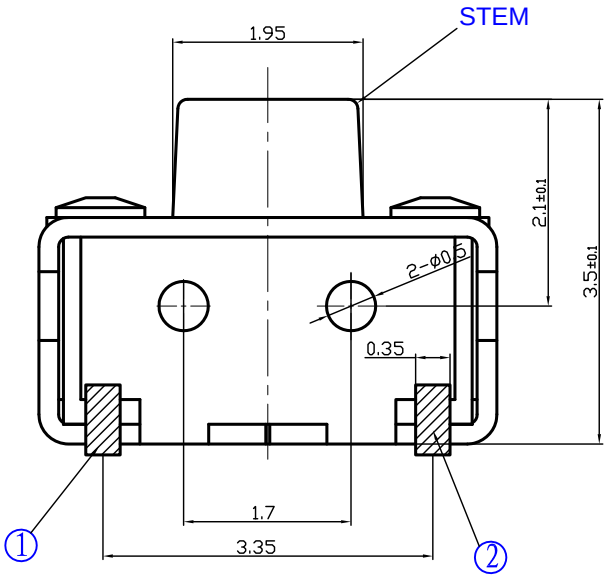

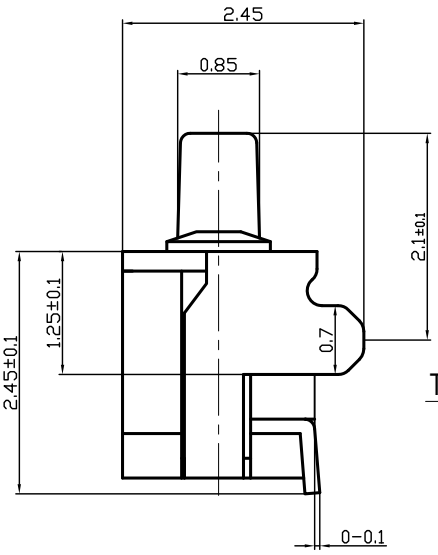

TS-1806E- CXXQ

力度 16=160gf
26=260gf

产品型号

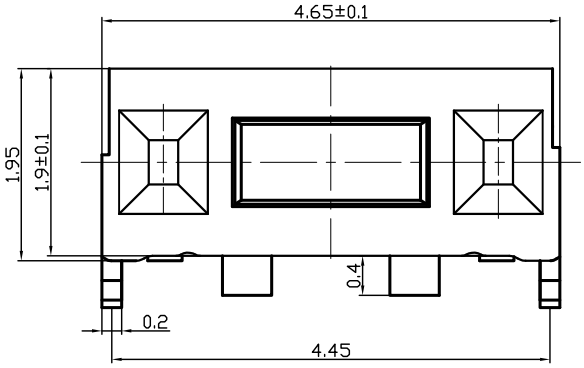

P.C.B LAYOUT

