ROHS Compliant

MAPX	MODIFICATION	DATE	DRAW	APPROVE

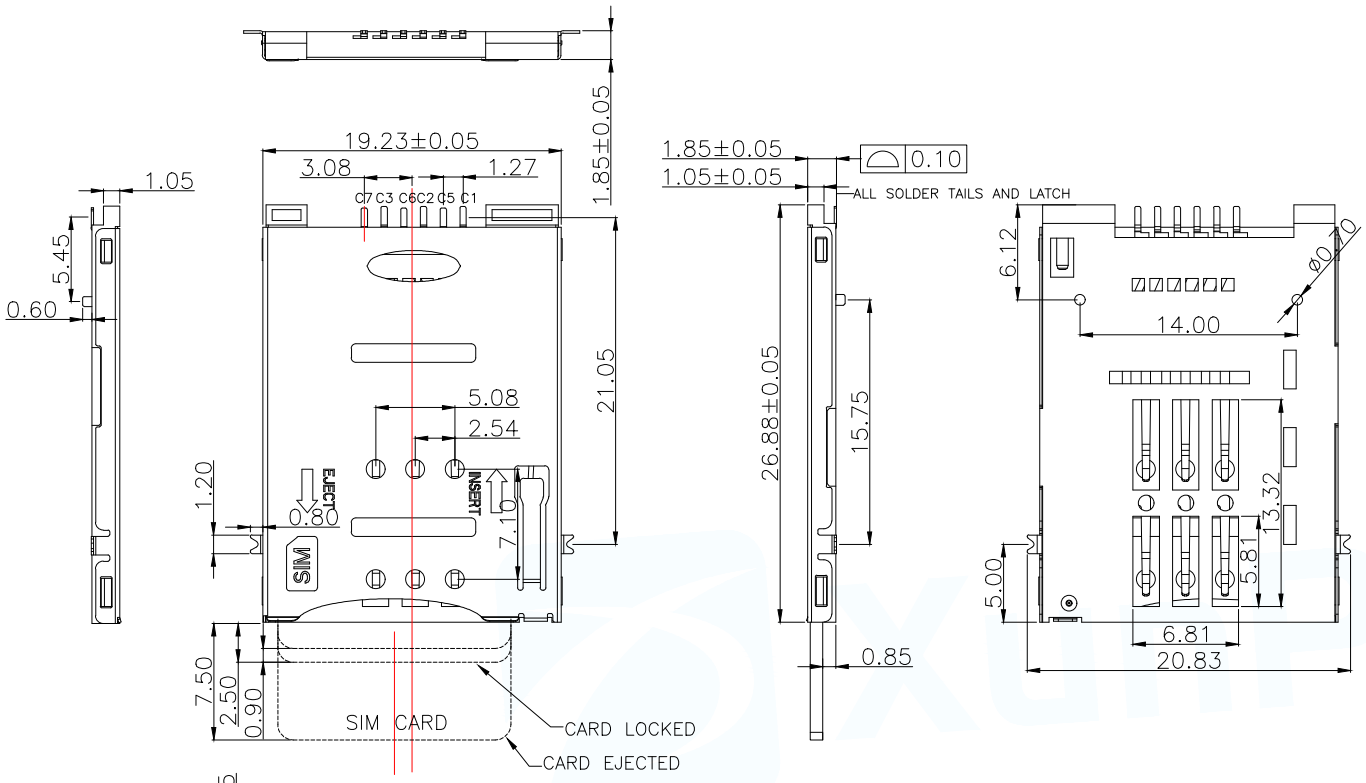

1.SPECIFICATIONS
INSULATION RESISTANCE: 500M min.AT DC 500V DC
WITHSTANDING VOLTAGE: 250V ACrms FOR 1 MINUTE
CONTACT RESISTANCE: 100M max. AT 10MA/20mV max
CURRENT RATING: 0.5A
VOLTAGE RATING: 5.0 vrms
OPERATING TEMP.RANGE:−55℃ ~ +85℃
MATING CYCLES: 5000 INSERTIONS

2.MATERIAL:
INSULATOR: H−TEMPERATURE PLASTIC,UL 94V−0,
COLOR"BLACK
TERMINAL: COPPER ALLOY,T=0.15mm
SHELL: STAINLESS STELL,T=0.15mm

3.FINISH:
TERMINAL:50u" min NICKEL UNDERPLATED ON ALLOVER,GOLD PLATING ON CONTACT ARER, 80u"min TIN ON SOLDER TAIL.
SHELL:50u" NICKEL UNDERPLATED ON ALLOVER, GOLD FLASH ON SOLDER LATCH

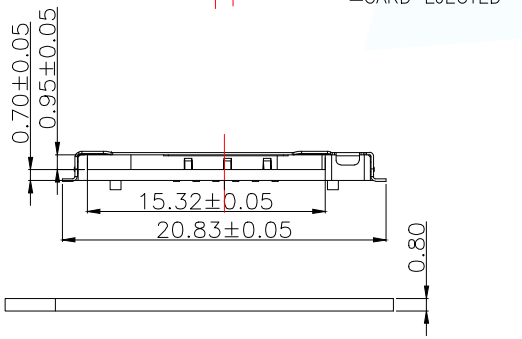

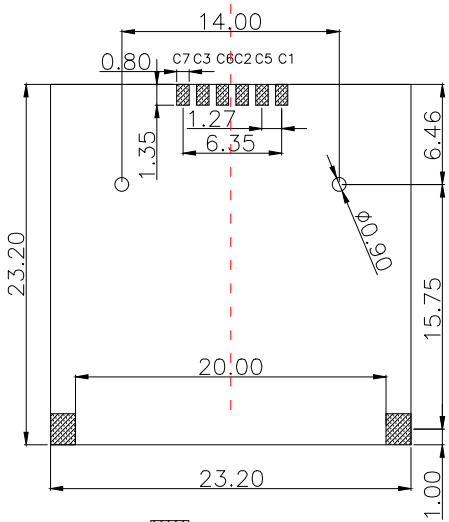

MINI SIM CARD	
Pin No.	NAME
C1	VCC OF SIM
C2	RST OF SIM
C3	CLK OF SIM
C5	GND OF SIM
C6	VPP OF SIM
C7	I/O OF SIM
C4/C8	N/A

MANUFACTURE DWG		东莞市讯普电子科技有限公司 DongGuan XunPu Electronics Co,Ltd	
UNLESS OTHERWISE SPECIFED TOLERANCES		TITLE:MINI SIM CARD PUSH PUSH 6P SMT有柱	
		PAR	SIM−114−ACP6
DECIMALS:	ANGLES:±1°	DWN	
X.X:±0.25		CHKD	
X.XX:±0.10		APVD	
X.XXX:±0.05		SCALE1:1	UNIT:MM
	CUSTOMER COPY	SIZE:A4	SHEET:1F1 REV:A