CHEVRON ELECTRONIC
诚潤電子

东莞市诚润电子科技有限公司
Chevron Electronic Technology Co Ltd
广东省东莞市厚街镇宝宏路鼎昊高新科技产业园 D 栋二楼
2nd Floor of Building D, Baohong Road Dinghao High-New Technology Industrial Park, Houjie Dongguan, Guangdong
Tel: +86 769-85888841 E-mail:ccre@chevronfuse.com
Web: www.chevronfuse.com

承 认 书

Specification For Approval

产品信息 Product information

产 品 名 称Product name： 小号螺栓式保险丝/Mini Bolt-type fuse

产 品 规 格Product model： APA xxA58V

拟 制 Prepared By	确 认 Reviewed By	批 准 Approved By
雷淑贤	邓 波	方 剑

客户承认 Customer Approval

客户名称 Customer name:

客户料号 Customer P/N:

经 办 Prepared By	审 核 Reviewed By	批 准 Approved By
确认结果 Verify the results：		
☐合格 Qualified	☐不合格 Unqualified	不合格原因 Root cause:

生效日期 Effective Date: 年 YY 月 MM 日 DD

1.如果本承认书获得贵司认可，请您签名后拷贝一份回传给我们。
If this acknowledgement letter is approved by your company, please sign it and send us a copy
2.当您下订单给诚润电子时，烦请在订单中列出上面产品信息表格中的产品名称和产品规格。
When you place an order with chevron Electronics, please kindly list the product names and specifications in the product information table above in the order form

变更履历

内　容	日　期	确 认
新增规格书	2025.4.27	方剑
增加证书编号、认证标志	2026.4.16	方剑

编　制	确　认	批　准
蒋美林	邓　波	方　剑

1.适用范围 / Scope of Application

本产品适用于电动汽车；越野车；卡车；公交车；SUV 等。

This product is suitable for electric vehicles; Off-road vehicles; Trucks; Bus; SUV.

2.适用测试标准/ Standards

遵循 ISO 8820-5；GB/T 31465.5；UL248

In accordance with ISO 8820-5；GB/T 31465.5; UL248

3.结构及尺寸 / Structure and dimensions of individual units and tape carriers

实物示意图：

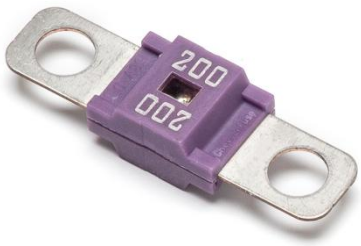

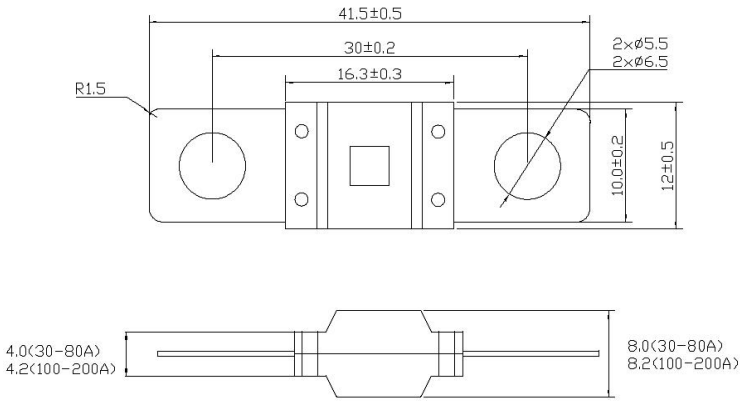

编号 No	各称 Name	材质 Materials
1	外壳 Shell	PA66+30GF
2	端子 Termination	铜镀锡 Tin plated brass
3	熔断体 Element	铜镀锡 Tin plated brass

4.认证清单/ Certification List

安规标准 Agency	认证电流 Ampere Range	证书编号 Agency File Number
UR-CUR	30A - 200A	E522468

5.产品标示 / Product Markin

保险丝外壳顶部需有下列标示：The top of the fuse cap shall have the following markings

以 **200A** 举例：Example **200A**

Chevronfuse	58V DC	200A
1	2	3

1 公司名称：Company Name: Chevron Fuse

2 额定电压：Rated voltage: 58V

3 额定电流：Rated Current: 200A

6.产品外观和形状要求/ Appearance and shape requirements

A. 外观不应出现显著的污点、裂纹，标识应该容易辨识

There shall not be any remarkable stain and crack on the appearances, markings shall be easily legible

B. 螺栓式保险丝

Bolt-type fuse

7.产品编码系统 / Product part number system

APA	XXXX	3	05
1	2	3	4

1. Product code 产品编号：
2. APA =Small bolt Automotive fuse(小号汽车保险丝)
3. Rated Current 额定电流：参照 4 电气规格
4. Rated Voltage 额定电压：3=32V DC，5=58V DC
5. Mounting code 安装代码：05=M5 孔径，06=M6 孔径

8.产品特性/Product Characteristic

Part No 产品目录号	Rated Current 额定电流	Case color 外壳颜色	Test Cable size (mm2) 电缆尺寸	Rated Voltage 额定电压	Breaking Capacity 分断能力	I²T (A²sec)	Cold Resistance (mΩ) 冷电阻	Safety Approvals 安全认证
APA2300XXX	30A	橙色	2.5	58V DC 32V DC	1KA@58VDC 2KA@32VDC	3087	2.82	c UL us
APA2400XXX	40A	绿色	4			2560	1.33	c UL us
APA2500XXX	50A	红色	6			3875	1.13	c UL us
APA2600XXX	60A	黄色	6			4824	0.88	c UL us
APA2700XXX	70A	茶色	10			11662	0.70	c UL us
APA2800XXX	80A	白色	10			10112	0.56	c UL us
APA3100XXX	100A	蓝色	16			40900	0.46	c UL us
APA3125XXX	125A	桃红色	25			64375	0.37	c UL us
APA3150XXX	150A	灰色	25			103950	0.32	c UL us
APA3175XXX	175A	薄茶色	25			138731	0.26	c UL us
APA3200XXX	200A	紫色	25			168000	0.24	c UL us

9.特性测试/ characteristic test

测试条件/Test Condition

A. 所有的测试环境温度保持在 25±10°的范围内

All the test environments are maintained within the temperature range of 25 ± 10 °C

B. IT 特性测试参考下表/IT Characteristic test follow up the form

% of Rating %额定电流(A)	熔断时间 Open Time(s)	
	30-125A	150A-200A
75%	/	>100h
100%	>100h	/
110%	>4h	/
150%	90 - 3600s	/
200%	3 - 100s	1 - 15s
300%	0.3 - 3s	/
350%	/	0.3 - 5s
500%	0.1 - 1s	/
600%	/	0.1 - 1s

C. 时间电流曲线参考图/IT time current curve

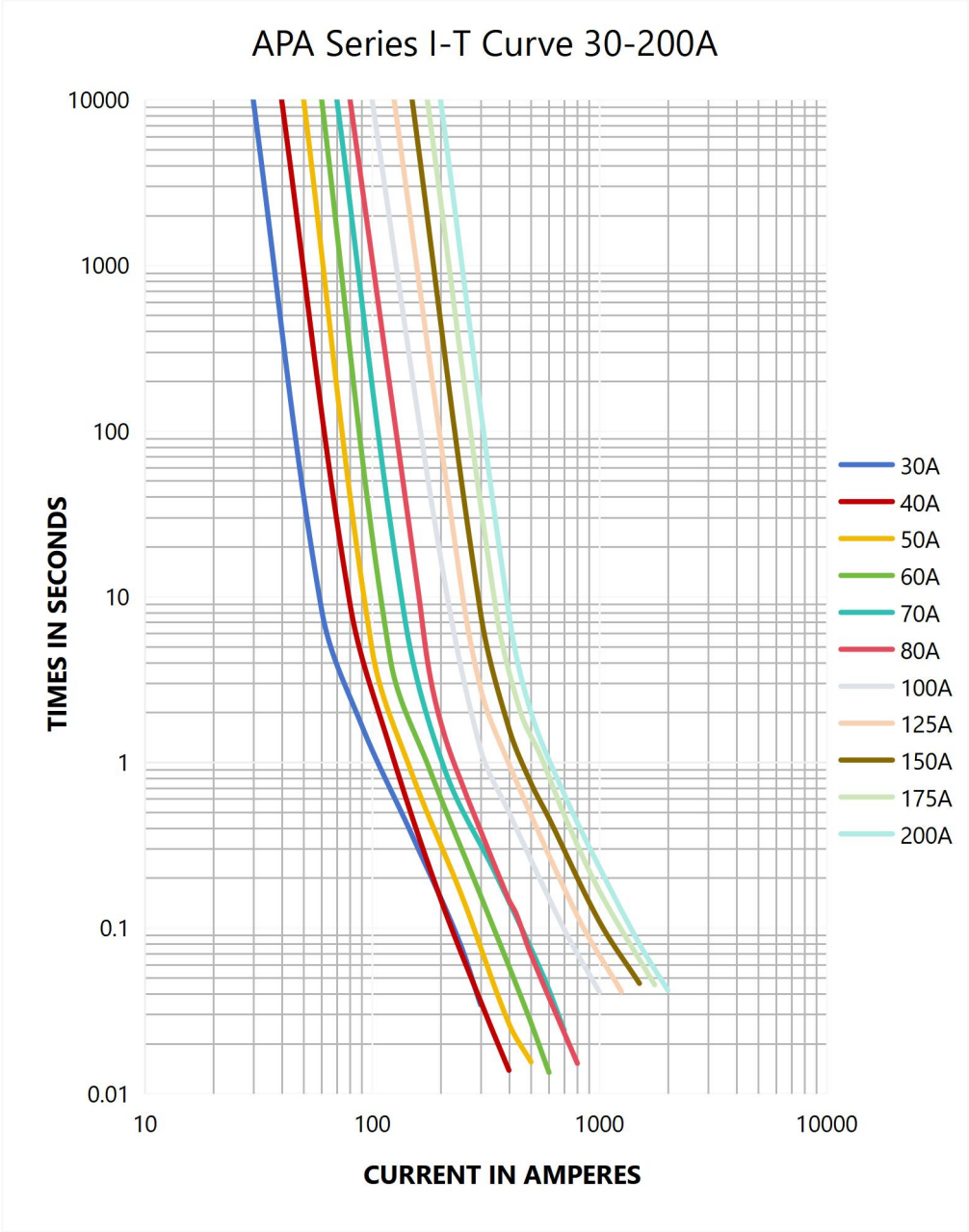

10 环境特性/ Environmental Characteristic

A. 正常操作温度范围-55℃～+125℃

Operating temperature -55℃～+125℃ Normal

B. 若工程师在设计保险丝安装的环境温度超出 25℃时，需要考虑环境温度对保险丝的寿命影响，请参考下面：

温度-电流曲线图

If the engineer finds that the ambient temperature where the fuse is installed exceeds 25℃, he/she needs to consider the influence of ambient temperature on the lifespan of the fuse. Please refer to the following:

Temperature - Current Curve Chart

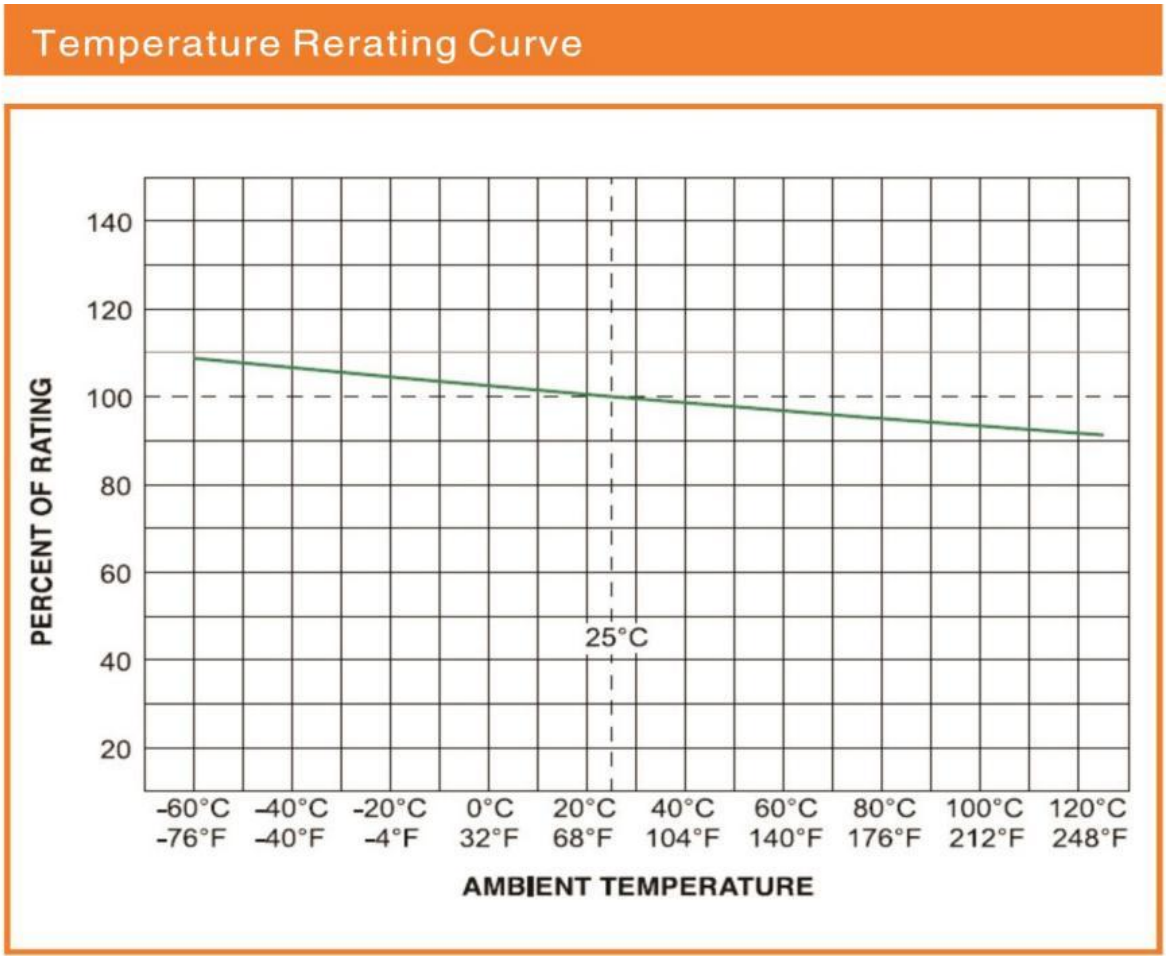

11.包装 / Packaging

1. 包装袋/盒上标签需明确产品料号，产品电压/电流及安规符号等信息；

   The labels on the packaging bags/boxes should clearly indicate the product part number, product voltage/current and safety symbols, etc

2. 包装材料均符合 ROHS/REACH/HF 的环保要求， 且包装材料不会和零件发生化学反应，造成不良；

   The packing material conforms to ROHS/REACH/HF environmental protection request. And the packing materials will not have the chemical reaction with the components

3. 散装按客户要求/Bulk according to customer requirements

12.其它/Other

1. 如果在使用中超出本规格书要求，须经双方协商确认；

   If the requirements exceed those stipulated in this specification during the usage, it shall be confirmed through consultation between both parties.

2. 如果本规格书有不适当的地方，须经过双方协商由本公司修改；

   If there is anything inappropriate in this specification, it shall be revised by our company after mutual consultation between both parties