WGD80P04

TO-252

RoHS COMPLIANT

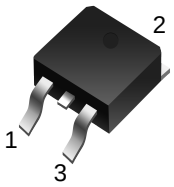



1.Gate (G)
2.Drain (D)
3.Source (S)

Features:

- ☐ Low Intrinsic Capacitances.
- ☐ Excellent Switching Characteristics.
- ☐ Extended Safe Operating Area.
- ☐ Unrivalled Gate Charge :Qg=115nC (Typ.).
- ☐ BVDSS=-40 V,I_D=-80A
- ☐ R_{DS}(on) :7.1mΩ (Typ.) @V_G=10V
- ☐ 100% Avalanche Tested

Absolute Maximum Ratings (T_C=25℃ unless otherwise specified)

Symbol	Parameter		Max.	Units
V_{DSS}	Drain-Source Voltage		-40	V
V_{GSS}	Gate-Source Voltage		±20	V
I_D	Continuous Drain Current	T_C = 25℃	-80	A
		T_C = 100℃	-46	A
I_{DM}	Pulsed Drain Current note1		-280	A
E_{AS}	Single Pulsed Avalanche Energy note2		182	mJ
P_D	Power Dissipation	T_C = 25℃	90	W
$R_{\theta JC}$	Thermal Resistance, Junction to Case		1.7	℃/W
T_J, T_{STG}	Operating and Storage Temperature Range		-55 to +175	℃

Thermal Characteristics

Symbol	Parameter	Typ.	Max.	Unit
$R_{\theta JC}$	Thermal Resistance,Junction to Case	-	1.55	℃/W
$R_{\theta JA}$	Thermal Resistance,Junction to Ambient	-	62.5	℃/W

WildGoose Semiconductor

Electrical Characteristics (T_J=25℃ unless otherwise specified)

Symbol	Parameter	Test Condition	Min.	Typ.	Max.	Units
Off Characteristic						
$V_{(BR)DSS}$	Drain-Source Breakdown Voltage	V_{GS}=0V, I_D= -250μA	-40	-	-	V
I_{DSS}	Zero Gate Voltage Drain Current	V_{DS}= -40V, V_{GS}=0V	-	-	-1	μA
I_{GSS}	Gate to Body Leakage Current	V_{DS}=0V, V_{GS}= ±20V	-	-	±100	nA
On Characteristics						
$V_{GS(th)}$	Gate Threshold Voltage	V_{DS}=V_{GS}, I_D= -250μA	-1.0	-1.5	-2.5	V
$R_{DS(on)}$	Static Drain-Source on-Resistance note3	V_{GS}= -10V, I_D= -30A	-	7.1	9.2	mΩ
		V_{GS}= -4.5V, I_D= -20A	-	9.3	13	
Dynamic Characteristics						
C_{iss}	Input Capacitance	V_{DS}= -20V, V_{GS}=0V, f=1.0MHz	-	7200	-	pF
C_{oss}	Output Capacitance		-	625	-	pF
C_{rss}	Reverse Transfer Capacitance		-	437	-	pF
Q_g	Total Gate Charge	V_{DS}= -20V, I_D= -20A, V_{GS}= -10V	-	115	-	nC
Q_{gs}	Gate-Source Charge		-	23	-	nC
Q_{gd}	Gate-Drain(“Miller”) Charge		-	20	-	nC
Switching Characteristics						
$t_{d(on)}$	Turn-on Delay Time	V_{DD}= -20V, I_D= -20A, V_{GS}= -10V, R_{GEN}=3Ω	-	15	-	ns
t_r	Turn-on Rise Time		-	88	-	ns
$t_{d(off)}$	Turn-off Delay Time		-	122	-	ns
t_f	Turn-off Fall Time		-	101	-	ns
Drain-Source Diode Characteristics and Maximum Ratings						
I_S	Maximum Continuous Drain to Source Diode Forward Current		-	-	-80	A
I_{SM}	Maximum Pulsed Drain to Source Diode Forward Current		-	-	-280	A
V_{SD}	Drain to Source Diode Forward Voltage	V_{GS}=0V, I_S= -30A	-	-	-1.2	V
trr	Reverse Recovery Time	V_{GS}=0V, I_S= -20A, di/dt=100A/μs	-	25	-	ns
Qrr	Reverse Recovery Charge		-	17	-	nC

Notes:1. Repetitive Rating: Pulse Width Limited by Maximum Junction Temperature

2. EAS condition: T_J= 25℃, V_{DD}= -20V, V_G= -10V, L= 0.5mH, R_G= 25Ω, I_{AS}= -27A

3. Pulse Test: Pulse Width≤300μs, Duty Cycle≤2%

WidGoose Semiconductor

Typical Performance Characteristics

Figure1: Output Characteristics

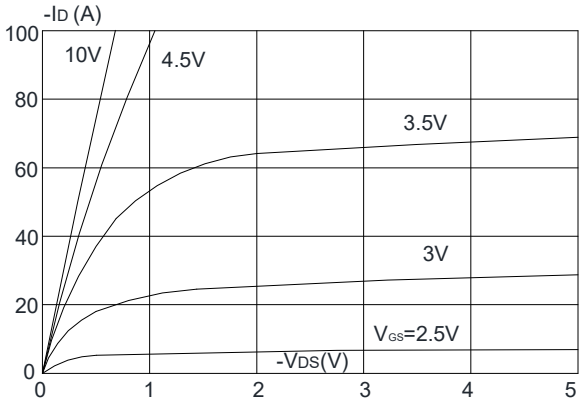

Figure 2: Typical Transfer Characteristics

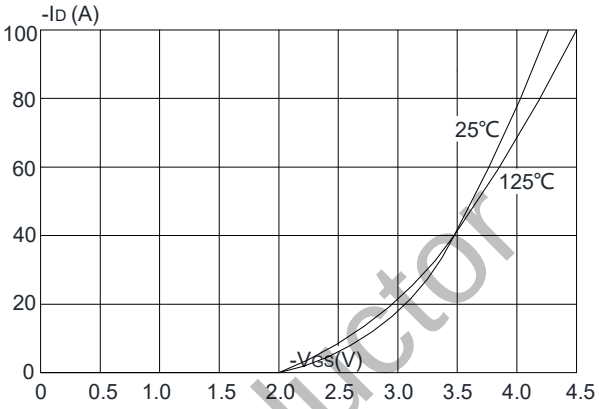

Figure 3: On-resistance vs. Drain Current

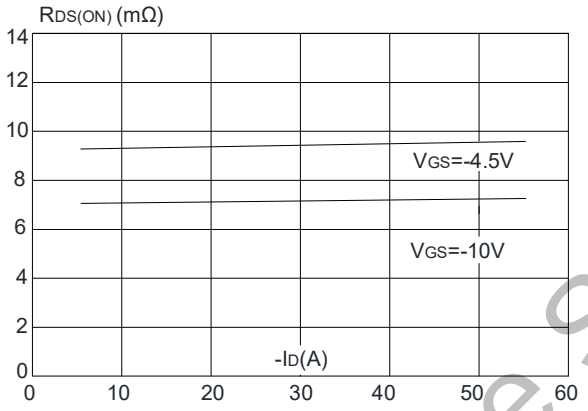

Figure 4: Body Diode Characteristics

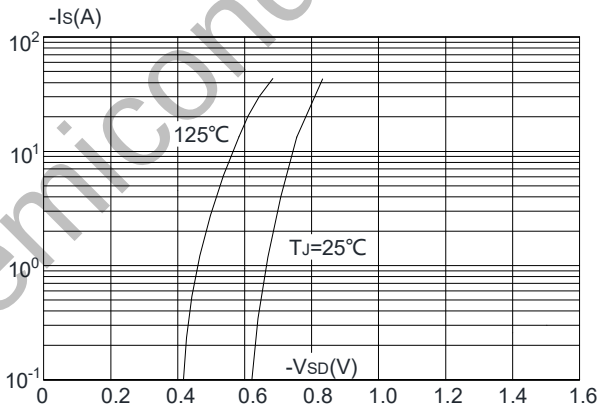

Figure 5: Gate Charge Characteristics

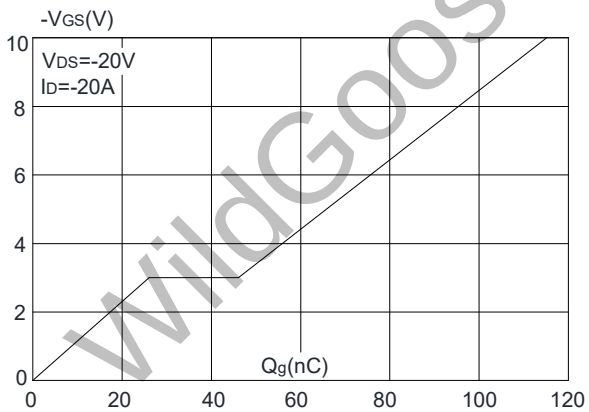

Figure 6: Capacitance Characteristics

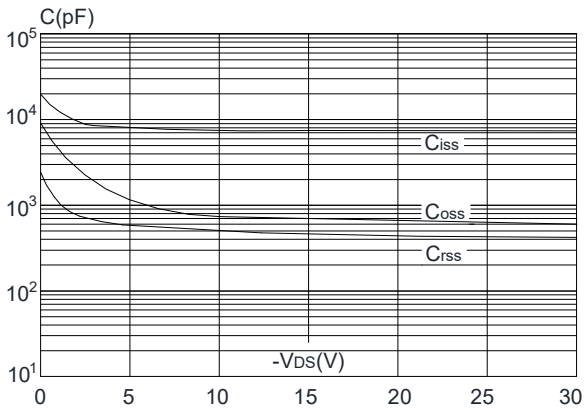

WildGoose Semiconductor

Typical Performance Characteristics

Figure 7: Normalized Breakdown Voltage vs. Junction Temperature

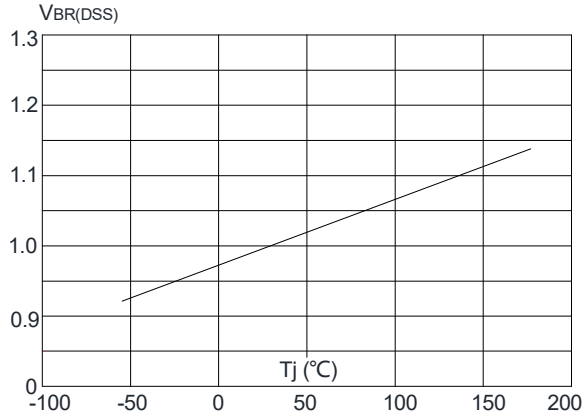

Figure 8: Normalized on Resistance vs. Junction Temperature

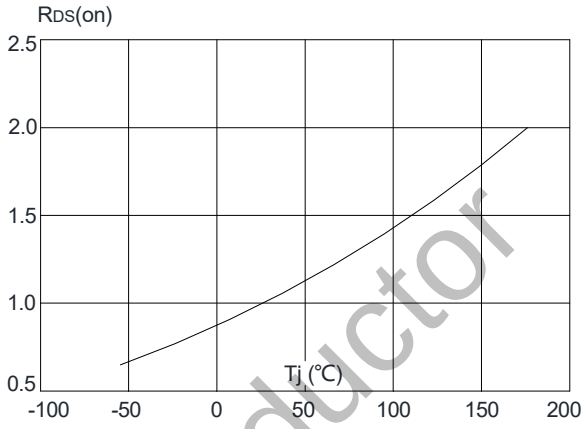

Figure 9: Maximum Safe Operating Area

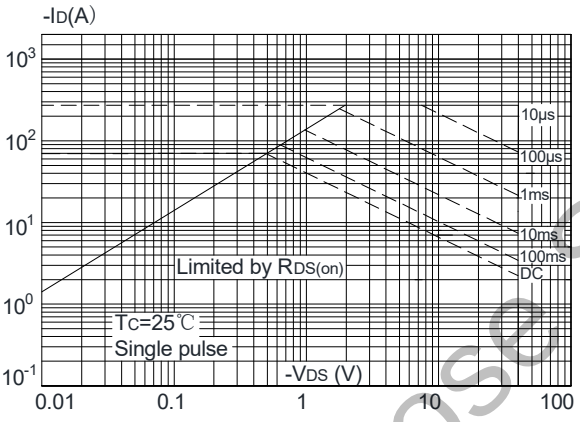

Figure 10: Maximum Continuous Drain Current vs. Case Temperature

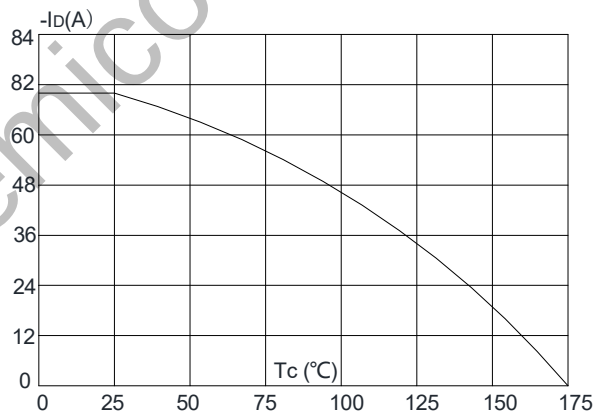

Figure.11: Maximum Effective Transient Thermal Impedance, Junction-to-Case

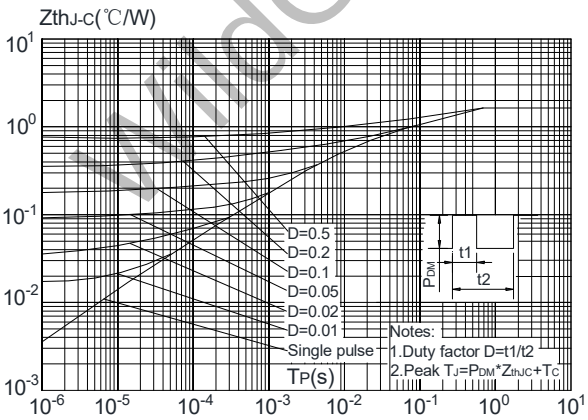

WinGoodSemiconductor

Test Circuit

Gate Charge Test Circuit & Waveform

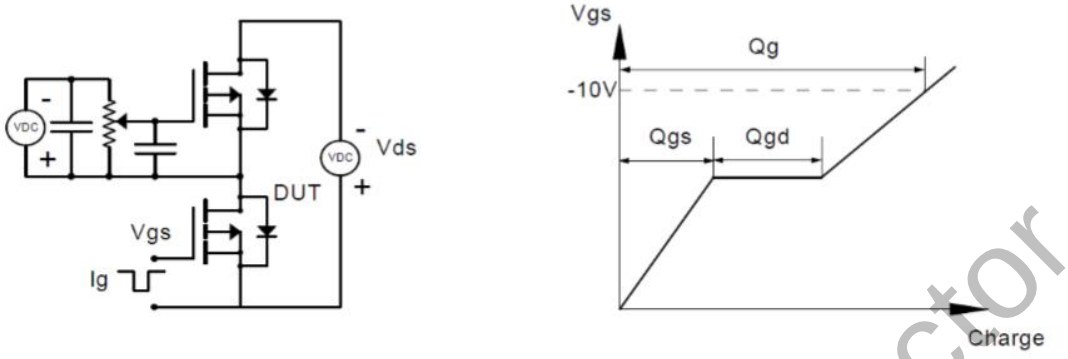

Resistive Switching Test Circuit & Waveforms

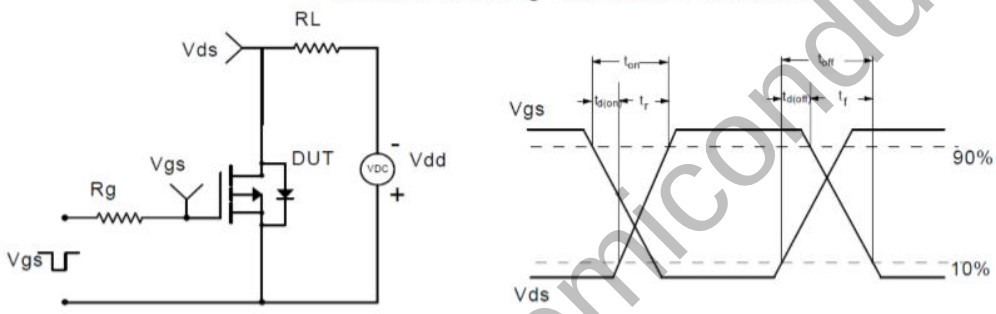

Unclamped Inductive Switching (UIS) Test Circuit & Waveforms

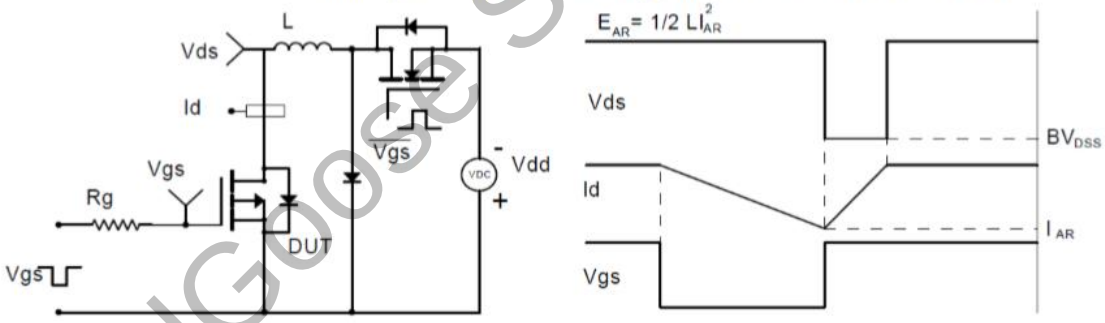

Diode Recovery Test Circuit & Waveforms

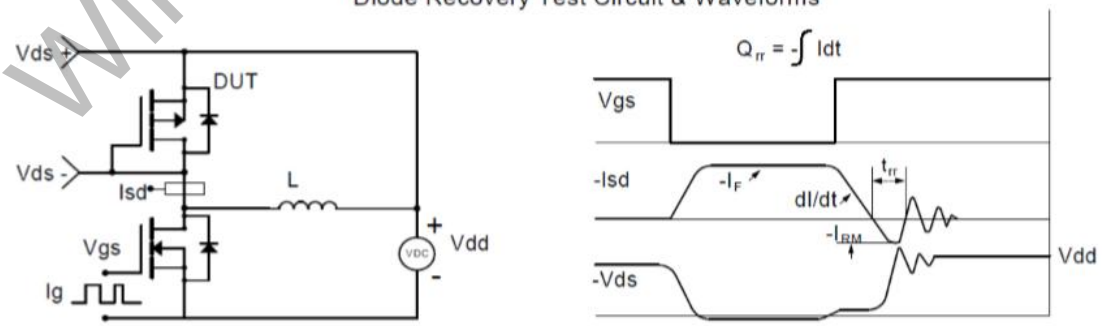

WildGoose Semiconductor

Package Dimension

TO-252

Unit: mm

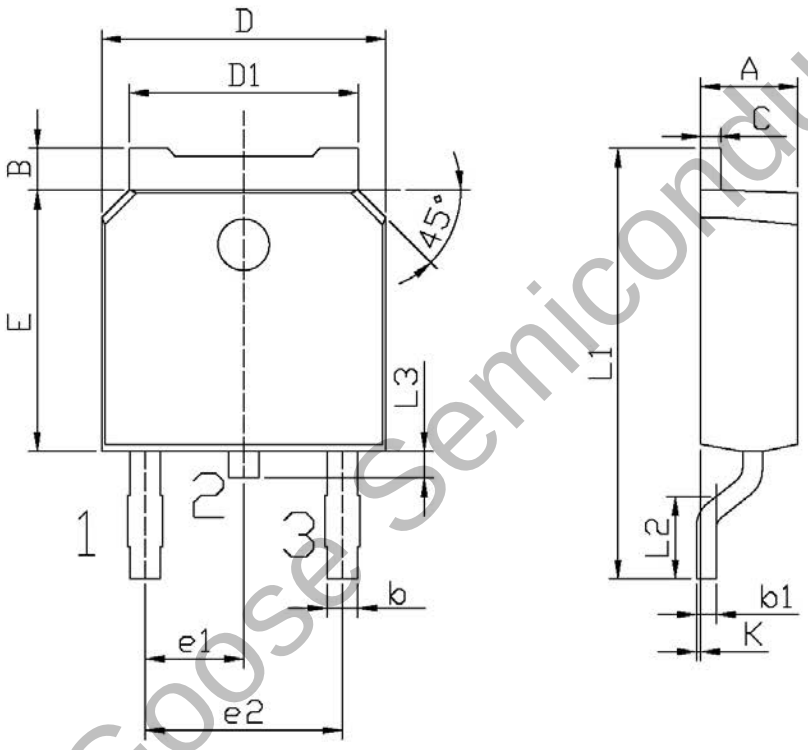

WildGoose Semiconductor

Symbol	Dimensions In Millimeters		Symbol	Dimensions In Millimeters	
	Min	Max		Min	Max
A	2.20	2.40	E	5.95	6.25
B	0.95	1.25	e1	2.24	2.34
b	0.70	0.90	e2	4.43	4.73
b1	0.45	0.55	L1	9.85	10.35
C	0.45	0.55	L2	1.25	1.75
D	6.45	6.75	L3	0.60	0.90
D1	5.20	5.40	K	0.00	0.10