GR1509 SIMPLE SWITCHER Power Converter 150-kHz 2-A Step-Down Voltage Regulator

1. General Description

1.1 Description

The GR1509 series of regulators are monolithic integrated circuits that provide all the active functions for a step-down(buck) switching regulator, capable of driving a 2-A load with excellent line and load regulation. These devices are available in fixed output voltages of 3.3 V, 5 V, 12 V, and an adjustable output version.

Requiring a minimum number of external components, these regulators are simple to use and include internal frequency compensation, and a fixed-frequency oscillator.

The GR1509 series operates at a switching frequency of 150 kHz,thus allowing smaller sized filter components than what can be required with lower frequency switching regulators.

1.2 Features

- 3.3-V, 5-V, 12-V, and adjustable output versions
- Adjustable version output voltage range: 1.2-V to 37-V+4% maximum over line and load conditions
- 2-A output load current
- Input voltage range up to 40 V
- Requires only four external components
- Excellent line and load regulation specifications
- 150-kHz fixed-frequency internal oscillator
- TTL shutdown capability
- Low power standby mode, I_Q, typically 80 μ A
- High efficiency
- Uses readily available standard inductors
- Thermal shutdown and current-limit protection

1.3 Device Information

PART NUMBER	PACKAGE
GR1509	SOP

2. Connection Diagrams and Pin Description

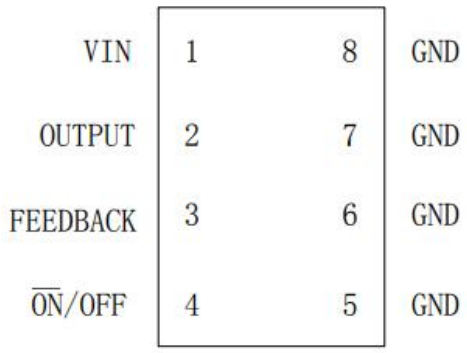

Figure 2.1: SOP8

PIN No.	NAME	I/O	FUNCTION
1	V_{IN}	I	This is the positive input supply for the IC switching regulator. A suitable input bypass capacitor must be present at this pin to minimize voltage transients and to supply the switching currents required by the regulator.
2	Output	O	Internal switch. The voltage at this pin switches between approximately (+VIN - VSAT) and approximately -0.5 v, with a duty cycle of VOUT / VIN. To minimize coupling to sensitive circuitry, the PCB copper area connected to this pin must be kept to a minimum.
5-8	GND	-	Circuit ground
3	Feedback	I	Senses the regulated output voltage to complete the feedback loop.
4	$\overline{ON}$/OFF	I	Allows the switching regulator circuit to be shut down using logic signals thus dropping the total input supply current to approximately 80 uA.Pulling this pin below a threshold voltage of approximately 1.3 V turns the regulator on, and pulling this pin above 1.3 V (up to a maximum of 25 V) shuts the regulator down. If this shutdown feature is not required.the ON/OFF pin can be wired to the ground pin or it can be left open. in either case, the regulator will be in the ON condition.

3. Functional Block Diagram

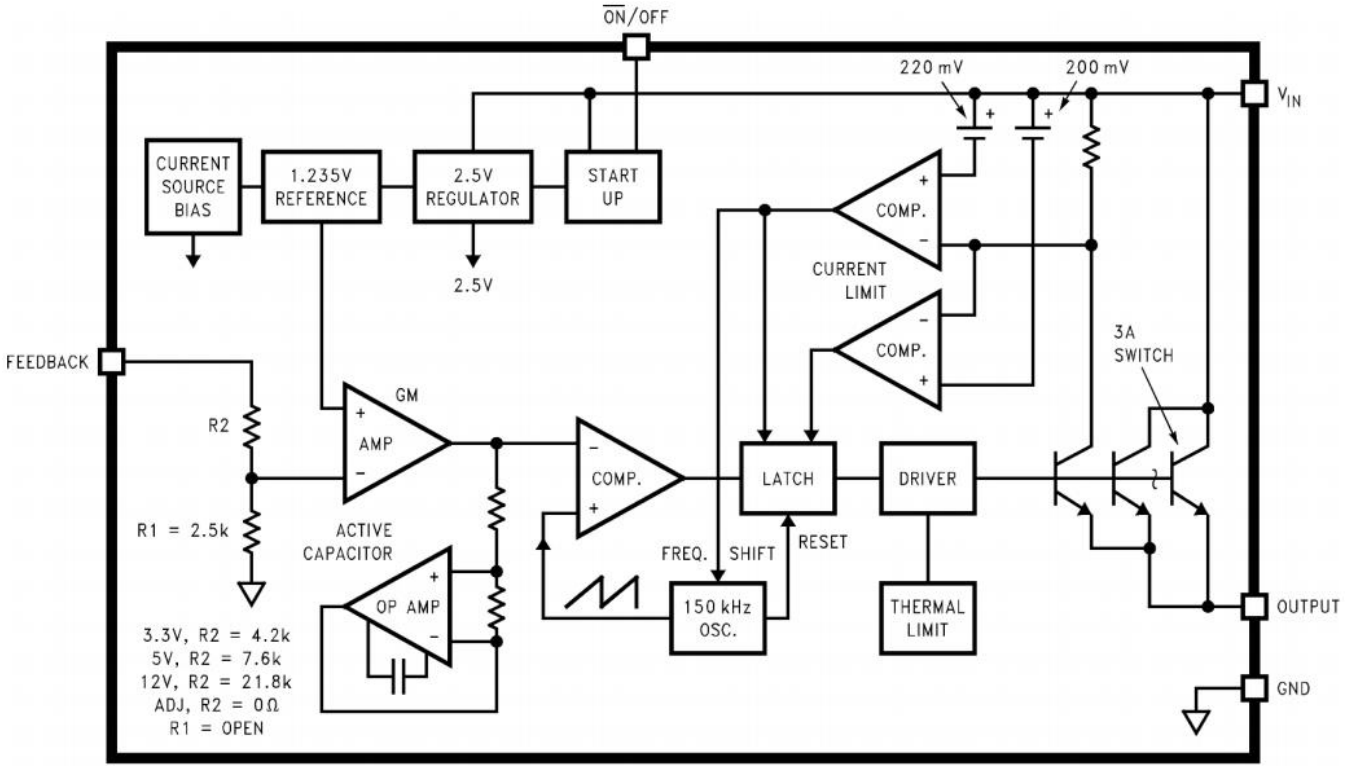

Figure 3.1：GR1509 Functional Block Diagram

4. Specifications

4.1 Absolute Maximum Ratings

(Ta=25℃,unless otherwise specified)

Parameter	MIN	MAX	Unit
Maximum supply voltage (VIN)		45	V
Feedback pin voltage	-0.3	25	V
Output voltage to ground, steady-state		-1	V
Power dissipation	Internally limited		
Maximum junction temperature		150	℃
Storage temperature, Tstg	-65	150	℃

Absolute maximum ratings are those values beyond which the device could be permanently damaged,These are stress ratings only,which do not imply functional operation of the device at these or any other conditions beyond those indicated under normal operating conditions.

4.2 Recommended Operating Conditions

Parameter	MIN	MAX	Unit
Supply voltage	4.5	40	V
Temperature	-40	125	℃

4.3 Electrical Characteristics-3.3V Version

(T_a=25℃,unless otherwise specified)

Symbol	Parameter	Test Condition	MIN	TYP	MAX	Unit
V_{OUT}	Output voltage	4.75 V≤ VN ≤ 40 V, 0.2 A ≤ ILOAD ≤ 2 A	3.168	3.3	3.432	V
η	Efficiency	VIN = 12 V, ILOAD = 2 A		75%		

4.4 Electrical Characteristics-5V Version

(T_a=25℃,unless otherwise specified)

Symbol	Parameter	Test Condition	MIN	TYP	MAX	Unit
V_{OUT}	Output voltage	7 V≤ VN ≤ 40 V, 0.2 A ≤ ILOAD ≤ 2 A	4.8	5	5.2	V
η	Efficiency	VIN = 12 V, ILOAD = 2A		82%		

4.5 Electrical Characteristics-12V Version

(T_a=25℃,unless otherwise specified)

Symbol	Parameter	Test Condition	MIN	TYP	MAX	Unit
V_{OUT}	Output voltage	15V≤ VN ≤ 40 V, 0.2 A ≤ ILOAD ≤ 2 A	11.52	12	12.48	V
η	Efficiency	VIN = 25 V, ILOAD = 2 A		90%		

4.6 Electrical Characteristics-Adjustable Voltage Version

(T_a=25℃,unless otherwise specified)

Symbol	Parameter	Test Condition	MIN	TYP	MAX	Unit
V_{FB}	Feedback voltage	4.5V≤ VN ≤ 40 V, 0.2 A ≤ ILOAD ≤ 2 A		1.23		
		Vout programmed for 3V	1.193		1.267	V
η	Efficiency	VIN = 12 V, ILOAD = 2 A		74%		

4.7 Electrical Characteristics – All Output Voltage Versions

Specifications are for TJ= 25°C, ILOAD = 500 mA, VIN = 12 V for the 3.3-V, 5-V, and adjustable version, and VIN = 24 V for the 12-V version (unless otherwise noted)

Symbol	Parameter	Test Condition	MIN	TYP	MAX	Unit
Ib	Feedback bias current	Adjustable version only, VFB=1.3V		10	50	nA
fo	Oscillator frequency		127	150	183	khz
Vsat	Saturation voltage	Iout=2A		1.2		V
DC	Max duty cycle(ON)			100%		
	Min duty cycle(OFF)			0%		
I_{CL}	Current limit	Peak current	3.6	4.5	6.9	A
I_L	Output leakage current	Output=0v,Vin=40v			50	uA
		Output=-1v		2	30	mA
I_Q	Operating quiescent current			5	10	mA
I_{STBY}	Current standby quiescent	$\overline{ON}$/OFF pin=5v(OFF)		80	200	uA
$\overline{SHUTDOWN}$/SOFT-START CONTROL						
VIH	$\overline{ON}$/OFF pin logic input threshold voltage	*Low (regulator ON)*		1		V
VIL		*High (regulator OFF)*		1.3		V
IH	$\overline{ON}$/OFF pin input current	*VLogic = 2.5 V (regulator OFF)*		10	15	uA
IL		*VLogic = 0.5 V (regulator ON)*		10		uA

5. Applications information

5.1 Fixed Output Series Buck Regulator

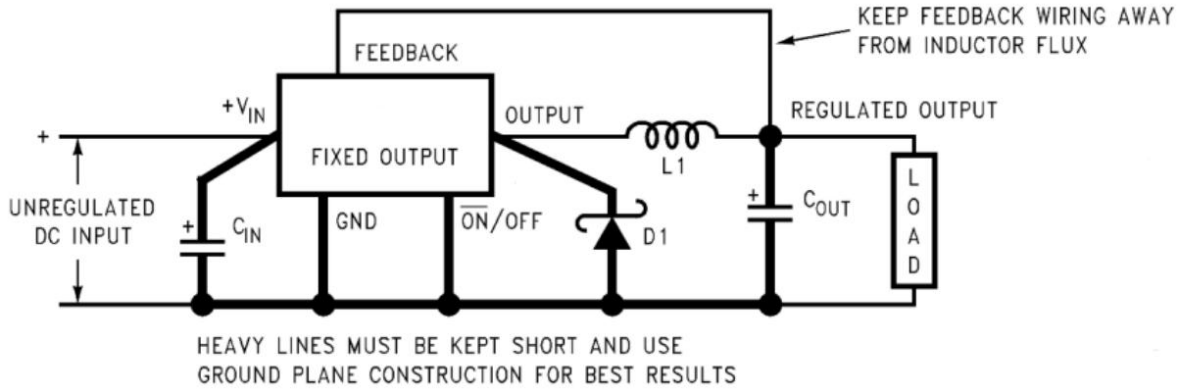

CIN — 470-μF, 50-V; COUT — 220-μF, 25-V ; D1 — 5-A, 40-V ; L1 — 68 μH;

Figure 5.1. Fixed Output Voltage Version

5.2 Adjustable Output Series Buck Regulator

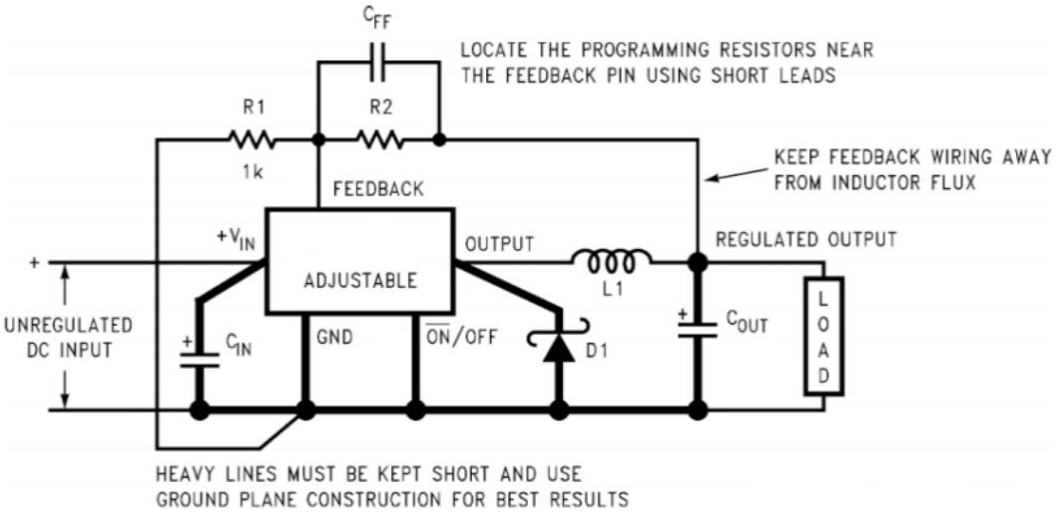

VOUT = VREF (1 + R2/R1) ;

CIN — 470-μF, 50-V; COUT — 220-μF, 35-V; D1 — 5-A, 40-V; L1 — 68 μH; R1 — 1kΩ, 1%;

Figure 5.2. Adjustable Output Voltage Version

6. Ordering Information

Orderable Device	Package Type	Pins	Packing	Package Qty
GR1509-3.3NS08ARBE	SOP	8	Tape & Reel	2500
GR1509-5.0NS08ARBE	SOP	8	Tape & Reel	2500
GR1509-12NS08ARBE	SOP	8	Tape & Reel	2500
GR1509-ADJNS08ARBE	SOP	8	Tape & Reel	2500

7. Package Information

7.1 SOP8

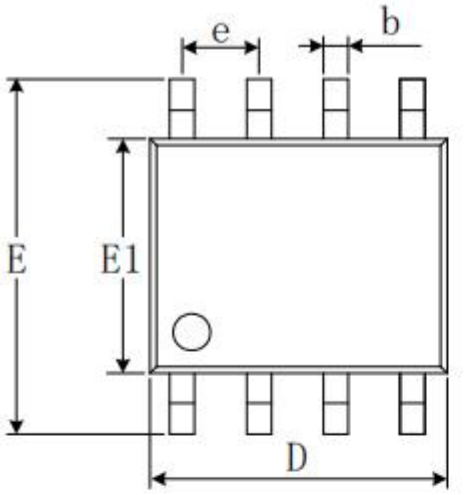

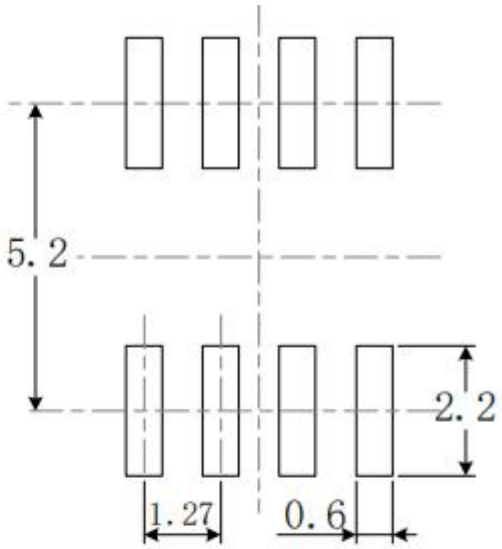

RECOMMENDED LAND PATTERN (Unit: mm)

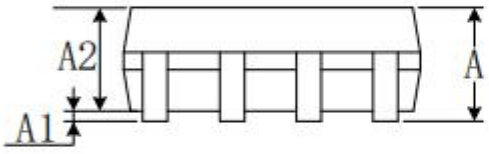

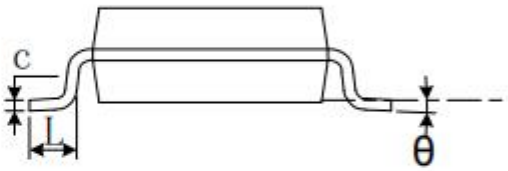

Symbol	Dimensions In Millimeters		Dimensions In Inches	
	Min	Max	Min	Max
A	1.350	1.750	0.053	0.069
A1	0.100	0.250	0.004	0.010
A2	1.350	1.550	0.053	0.061
b	0.330	0.510	0.013	0.020
c	0.170	0.250	0.007	0.010
D	4.800	5.000	0.189	0.197
e	1.270(BSC)		0.050(BSC)	
E	5.800	6.200	0.228	0.244
E1	3.800	4.000	0.150	0.157
L	0.400	1.270	0.016	0.050
θ	0°	8°	0°	8°