TACT SWITCH

硕方精密電子開關 www.Sofng.com

Operation: SMT/贴片立式 小型 轻触开关 [柄长/操作力可定制]

RoHS Compliant

LTEM NO.: TS-1101E-R4326 (Series)

(L3.50mm×W6.00mm TACT-SWITCH)

表面贴装 SMT

正向操作

精密部品 NICETY

可靠 STABILIZE

適合環保 RoHS

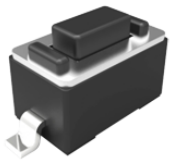

Material declaration

No.	NAME	Description
① A	嵌件	镀银&H62 黄铜
② B	基座	PA6T (Black)热塑性
③ C	簧片	镀银&不锈钢/SUS304
④ D	盖板	不锈钢 Q235-A
⑤ E	拨柄	PA6T (Black)热塑性

Technical parameter

PROJECT \ LEVEL		A[better product]	B[average product]
Electrical Properties	Contact Rating	0.25A, 24V DC	
	Initial Contact Resistance	50mΩ max.	
	Insulation Resistance	100MΩ min.500V DC Skey/PD：100MΩ min.300V DC	
	Withstand Voltage	300V AC for 1 minute	250 V AC for 1 minut
Durable Performance	There No Load	100,000 Cycles	75,000 Cycles
	Rated Load	80,000 Cycles	50,000 Cycles
Sterage temp.		-35℃～+75℃(Operating Temp:)	
Operating Force		1.6 / 2.6N.(1N.=100gram-force)	
Heat Rrsistance		IR Reflow:255℃,5sec. Manual:350℃,3sec.	

CIRCUIT DIAGRAM

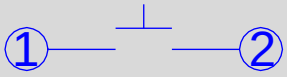

Unit:mm

P.C.B LAYOUT

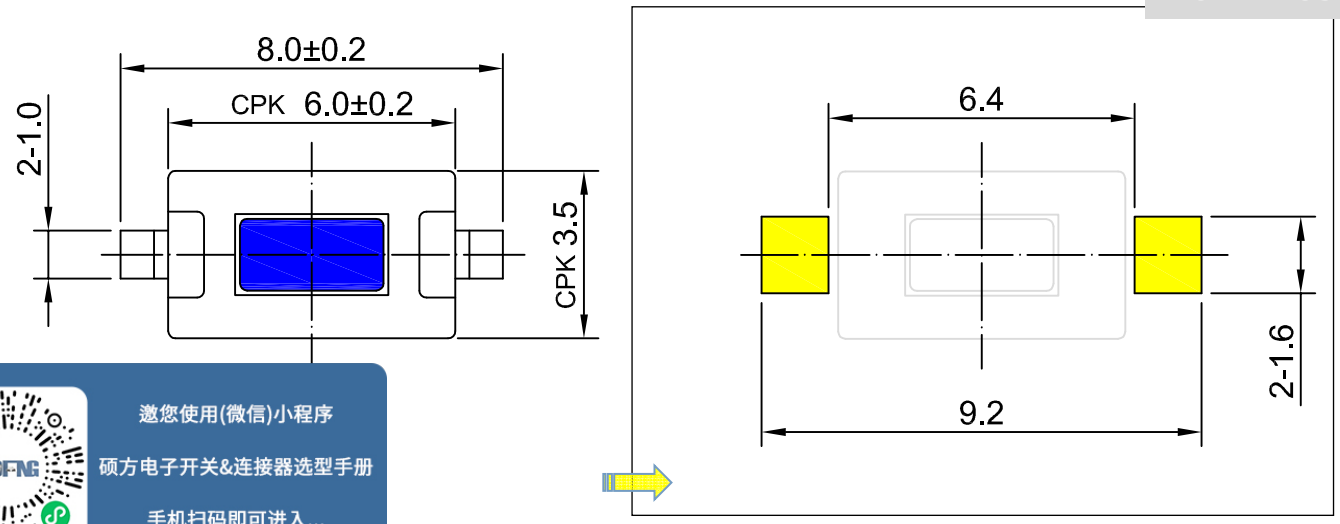

邀您使用(微信)小程序

硕方电子开关&连接器选型手册

手机扫码即可进入...

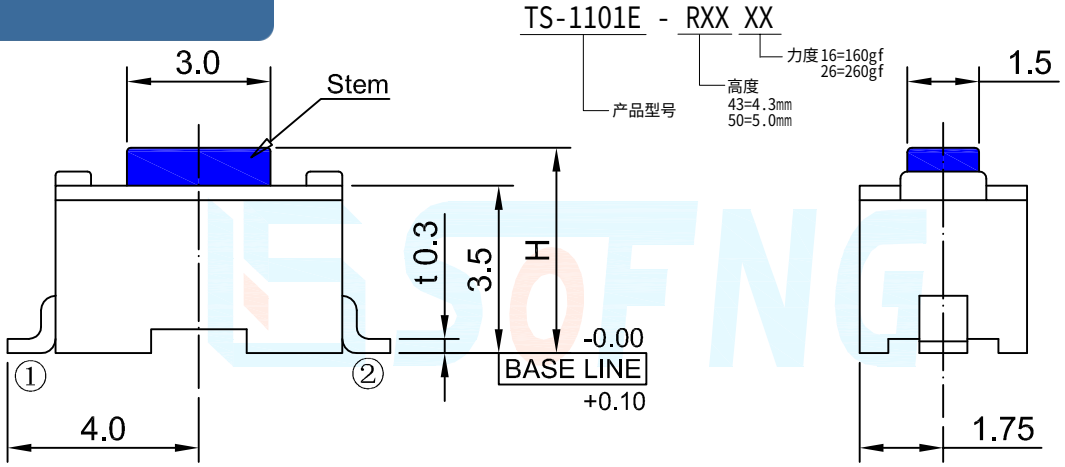

H
4.3
5.0