WG07V40

Features:

- ☐ Advanced Trench Technology
- ☐ Excellent Switching Characteristics
- ☐ Extended Safe Operating Area
- ☐ Ultra Low Gate Charge:Qg=28nC (Typ.)
- ☐ VDSS=40V, ID=20A
- ☐ Rds(on):7.0mΩ(Max.)@VG=10V
- ☐ 100% Avalanche Tested

SOP-8

RoHS COMPLIANT

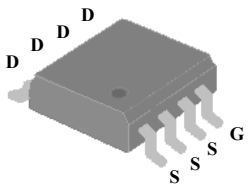

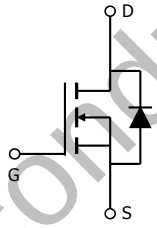

Schematic diagram

4: Gate (G)

1.2.3: Source (S)

5.6.7.8: Drain (D)

WildGoose Semiconductor

Absolute Maximum Ratings

Parameter	Symbol	Value	Unit
Drain-Source Voltage (V_{GS}=0V)	V_{DSS}	40	V
Gate-Source Voltage (V_{GS}=0V,static)	V_{GSS}	±20	V
Continuous Drain Current (T_C=25℃)	I_D	20	A
Continuous Drain Current (T_C=100℃)		10	A
Pulesd Drain Current	I_{DM}	65	A
Avalanche Energy, Single Pulsed	E_{AS}	105.8	mJ
Maximum Power Dissipation (T_C=25℃)	P_D	3.5	W
Maximum Power Dissipation (T_C=100℃)		1.5	W
Operating,Storage Temperature Range	T_J,T_{STG}	-55~150	℃

Thermal Data

Parameter	Symbol	Min.	Typ.	Max.	Unit
Thermal Resistance,Junction-to-Case	$R_{\theta JC}$	-	36	-	℃/ W
Thermal Resistance,Junction-to-Ambient	$R_{\theta JA}$	-	85	-	℃/ W

Electrical Characteristics (T_J=25℃, unless otherwise noted)

Symbol	Parameter	Conditions	Min.	Typ.	Max.	Unit
BV_{DSS}	Drain-Source Breakdown Voltage	V_{GS}=0V , I_D=250uA	40	---	---	V
$\triangle BV_{DSS}/\triangle T_J$	BVDSS Temperature Coefficient	Reference to 25℃ , I_D=1mA	---	0.028	---	V/℃
$R_{DS(ON)}$	Static Drain-Source On-Resistance[2]	V_{GS}=10V , I_D=20A	---	6.1	7.0	mΩ
		V_{GS}=4.5V , I_D=20A	---	8.0	9	
$V_{GS(th)}$	Gate Threshold Voltage	V_{GS}=V_{DS} , I_D =250uA	1.2	---	2.5	V
$\triangle V_{GS(th)}$	$V_{GS(th)}$ Temperature Coefficient		---	-6.16	---	mV/℃
I_{DSS}	Drain-Source Leakage Current	V_{DS}=24V , V_{GS}=0V , T_J=25℃	---	---	1	uA
		V_{DS}=24V , V_{GS}=0V , T_J=55℃	---	---	5	
I_{GSS}	Gate-Source Leakage Current	V_{GS}=±20V , V_{DS}=0V	---	---	±100	nA
gfs	Forward Transconductance	V_{DS}=5V , I_D=12A	---	47	---	S
R_g	Gate Resistance	V_{DS}=0V , V_{GS}=0V , f=1MHz	---	1.7	---	
Q_g	Total Gate Charge (4.5V)	V_{DS}=15V , V_{GS}=4.5V , I_D=10A	---	28	---	nC
Q_{gs}	Gate-Source Charge		---	7	---	
Q_{gd}	Gate-Drain Charge		---	6.9	---	
$T_{d(on)}$	Turn-On Delay Time	V_{DD}=15V , V_{GS}=10V , R_G=3.3 I_D=10A	---	9.6	---	ns
T_r	Rise Time		---	8.6	---	
$T_{d(off)}$	Turn-Off Delay Time		---	59	---	
T_f	Fall Time		---	15.6	---	
C_{iss}	Input Capacitance	V_{DS}=15V , V_{GS}=0V , f=1MHz	---	2585	---	pF
C_{oss}	Output Capacitance		---	267	---	
C_{rss}	Reverse Transfer Capacitance		---	210	---	
I_S	Continuous Source Current[1,5]	V_G=V_D=0V , Force Current	---	---	20	A
I_{SM}	Pulsed Source Current[2,5]		---	---	65	A
V_{SD}	Diode Forward Voltage[2]	V_{GS}=0V , I_S=1A , T_J=25℃	---	---	1.2	V
t_{rr}	Reverse Recovery Time	IF=10A , dI/dt=100A/μs , T_J=25℃	---	12	---	nS
Q_{rr}	Reverse Recovery Charge		---	4.8	---	nC

Note :
1.The data tested by surface mounted on a 1 inch^2 FR-4 board with 2OZ copper.
2.The data tested by pulsed , pulse width ≦ 300us , duty cycle ≦ 2%
3.The EAS data shows Max. rating . The test condition is V_{DD}=25V,V_{GS}=10V,L=0.1mH,I_{AS}=46A
4.The power dissipation is limited by 150℃ junction temperature
5.The data is theoretically the same as I_D and I_{DM} , in real applications , should be limited by total power dissipation.

WildGoose Semiconductor

Typical Characteristics

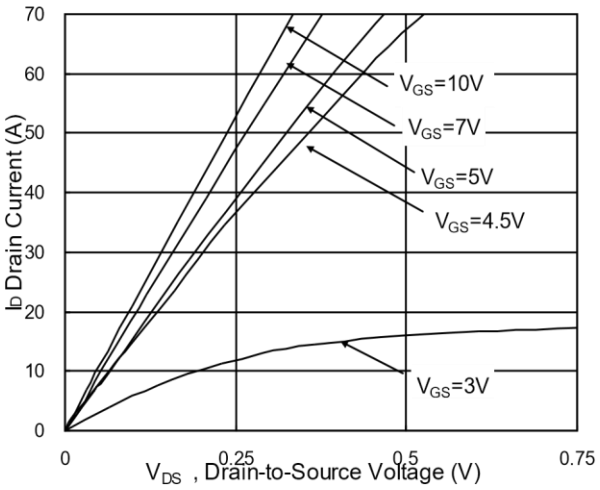

Fig.1 Typical Output Characteristics

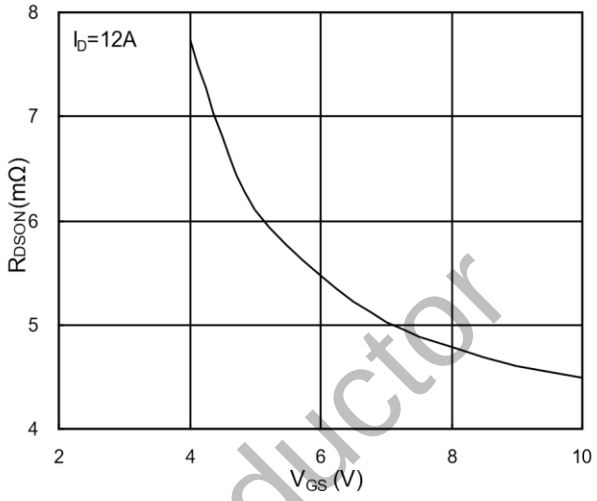

Fig.2 On-Resistance vs. Gate-Source

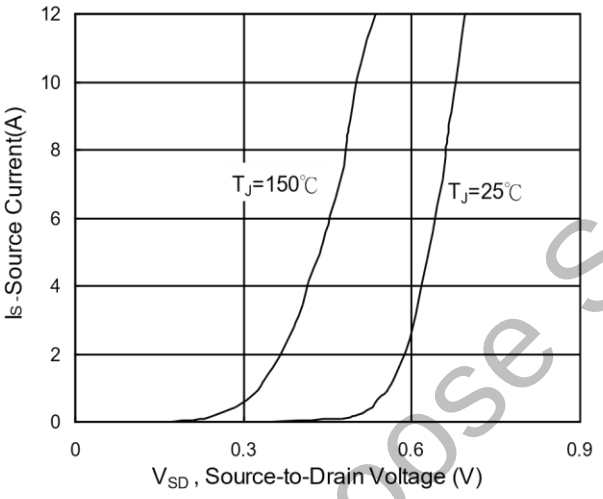

Fig.3 Forward Characteristics of Reverse

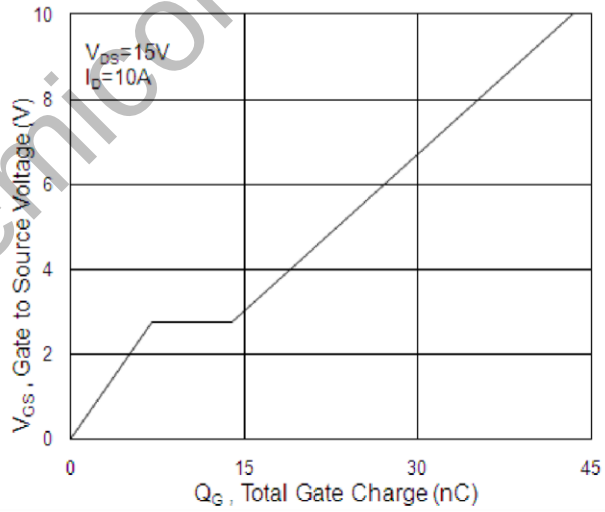

Fig.4 Gate-Charge Characteristics

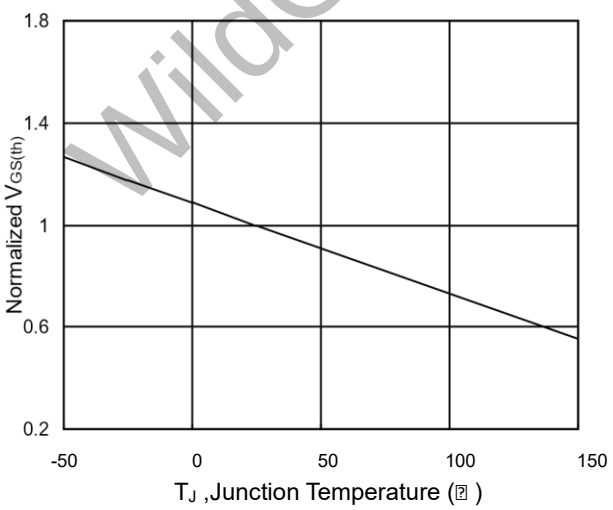

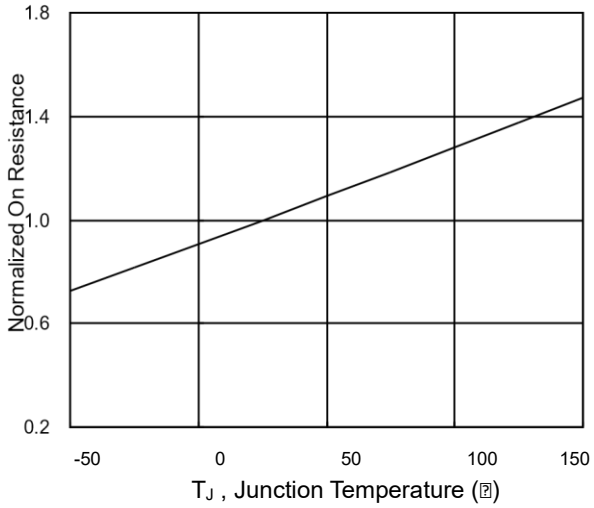

WildGoose Semiconductor

Fig.5 Normalized $V_{GS(th)}$ vs. T_J

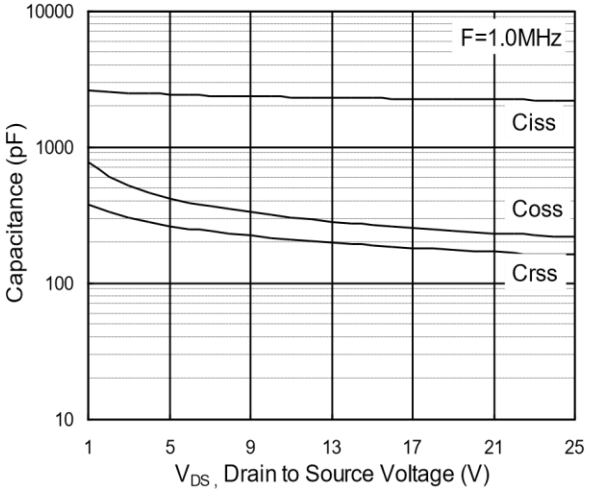

Fig.6 Normalized R_{DSON} vs. T_J

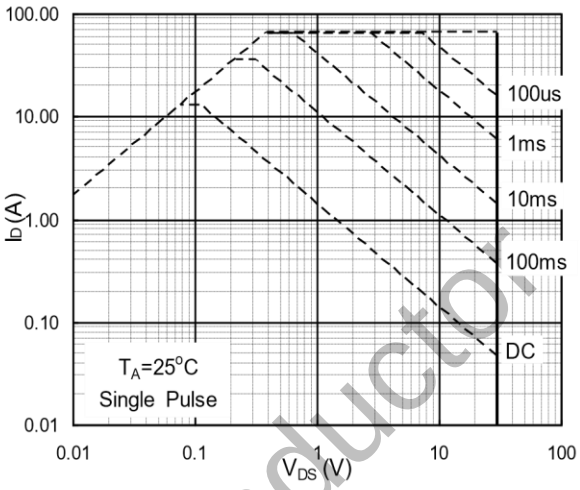

Fig.7 Capacitance

Fig.8 Safe Operating Area

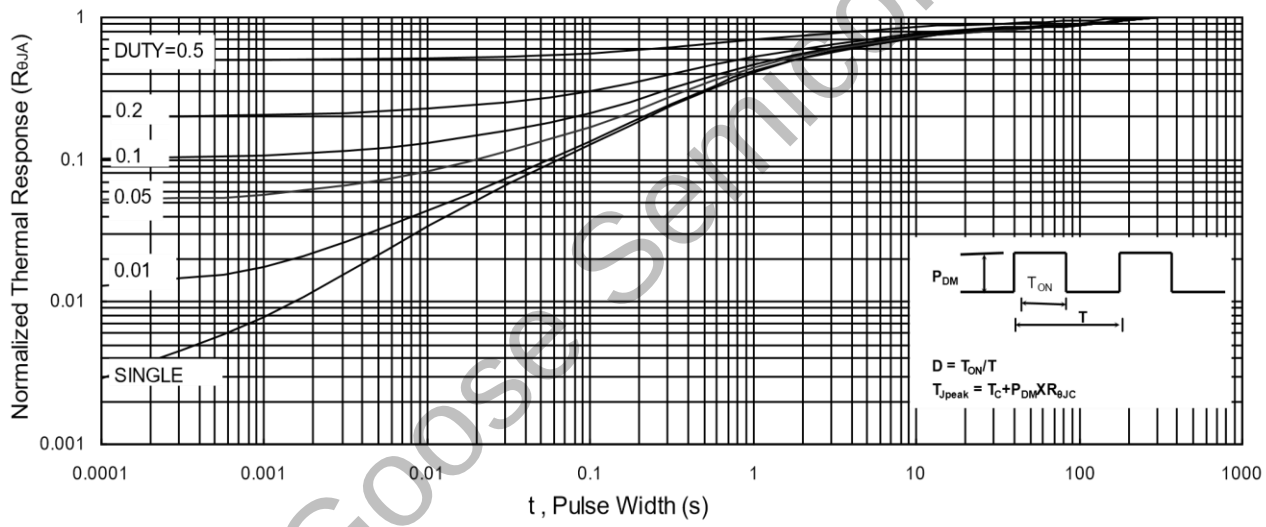

Fig.9 Normalized Maximum Transient Thermal Impedance

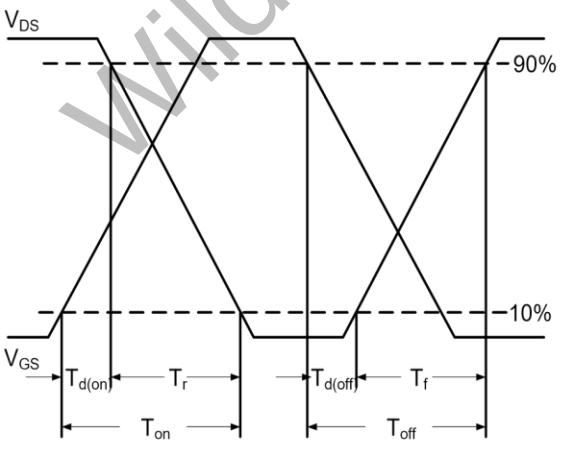

Fig.10 Switching Time Waveform

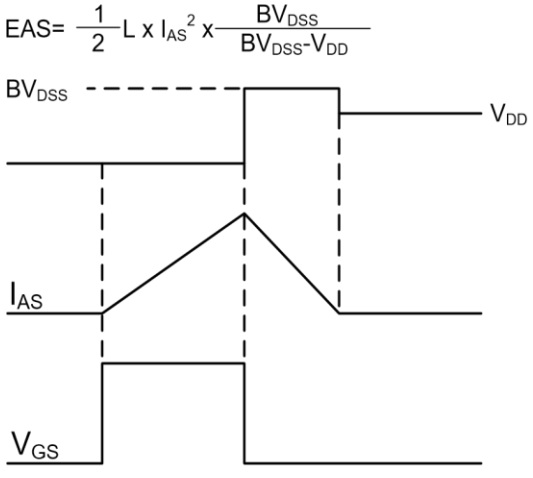

Fig.11 Unclamped Inductive Switching Waveform

WildGoose Semiconductor

Package Dimension

SOP-8

Unit: mm

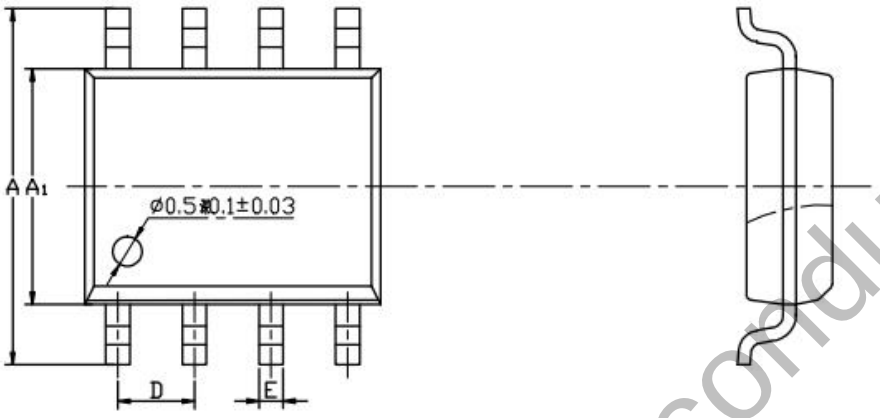

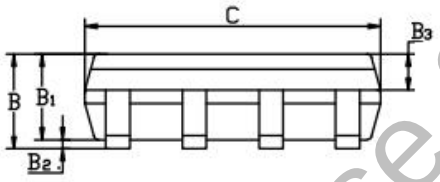

尺寸数据：				单位：mm
标注	Min	Nom	Max	备注
A	5.80	6.00	6.20	跨度
A_1	3.70	3.90	4.10	
B	1.50	1.60	1.75	
B_1	1.30	1.40	1.50	
B_2	0.05	0.125	0.2	站高
B_3	0.60	0.70	0.75	
C	4.75	4.85	5.05	
D	1.27BSC			
E	0.39	0.44	0.49	
H	0.10	0.20	0.25	
L	0.25BSC			
L_1	0.40	0.6	0.8	
L_2	0.95	1.05	1.20	脚长
e	0	4°	8°	

WildGoose Semiconductor