# WGM6306L

## Features:

- ☐ TrenchFET Power MOSFET
- ☐ Surface Mount Package
- ☐ Low On-resistance
- ☐ Unrivalled Gate Charge :Qg= 2.9 nC (Typ.)
- ☐ BVDSS=-20 V,ID= -3.0 A
- ☐ RDS(on) : 70 mΩ (Max) @VG=-4.5V
- ☐ 100% Avalanche Tested

SOT-23-6L

RoHS COMPLIANT

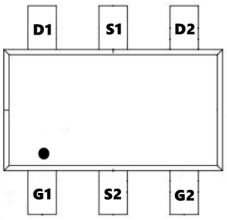


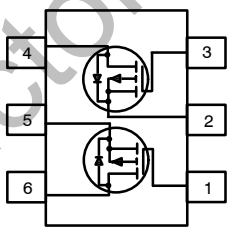


PIN CONNECTIONS

**ABSOLUTE MAXIMUM RATINGS ($T_a$=25℃ unless otherwise noted)**

| Symbol | Parameter | | Value | Units |
|---|---|---|---|---|
| $V_{DS}$ | Drain-to-Source Voltage | | -20 | V |
| $V_{GS}$ | Gate-to-Source Voltage | | ±12 | V |
| $I_D$ | Continuous Drain Current | $T_A$ = 25°C | -3.0 | A |
| | | $T_A$ = 100°C | -1.5 | |
| $I_{DM}$ | Pulsed Drain Current (1) | | 10 | A |
| $P_D$ | Power Dissipation | $T_A$ = 25°C | 1.0 | W |
| $R_{\theta JA}$ | Thermal Resistance, Junction to Ambient(2) | | 130 | °C/W |
| $T_J$, $T_{STG}$ | Junction & Storage Temperature Range | | -55 to 150 | °C |

WildGoose Semiconductor

## Electrical Characteristics ($T_A$=25℃unless otherwise noted)

| Parameter | Symbol | Condition | Min | Typ | Max | Unit |
|---|---|---|---|---|---|---|
| **Off Characteristics** | | | | | | |
| Drain-Source Breakdown Voltage | $BV_{DSS}$ | $V_{GS}$=0V $I_D$=-250μA | -20 | -24 | - | V |
| Zero Gate Voltage Drain Current | $I_{DSS}$ | $V_{DS}$=-20V,$V_{GS}$=0V | - | - | -1 | μA |
| **Parameter** | **Symbol** | **Condition** | **Min** | **Typ** | **Max** | **Unit** |
| Gate-Body Leakage Current | $I_{GSS}$ | $V_{GS}$=±12V,$V_{DS}$=0V | - | - | ±100 | nA |
| **On Characteristics** (Note 3) | | | | | | |
| Gate Threshold Voltage | $V_{GS(th)}$ | $V_{DS}$=$V_{GS}$,$I_D$=-250μA | -0.4 | -0.62 | -1 | V |
| Drain-Source On-State Resistance | $R_{DS(ON)}$ | $V_{GS}$=-4.5V, $I_D$=-3A | - | 55 | 70 | mΩ |
| | | $V_{GS}$=-2.5V, $I_D$=-2A | - | 70 | 100 | mΩ |
| Forward Transconductance | $g_{FS}$ | $V_{DS}$=-5V,$I_D$=-2A | 4 | - | - | S |
| **Dynamic Characteristics** (Note4) | | | | | | |
| Input Capacitance | $C_{lss}$ | $V_{DS}$=-10V,$V_{GS}$=0V, F=1.0MHz | - | 285 | - | PF |
| Output Capacitance | $C_{oss}$ | | - | 58 | - | PF |
| Reverse Transfer Capacitance | $C_{rss}$ | | - | 32 | - | PF |
| **Switching Characteristics** (Note 4) | | | | | | |
| Turn-on Delay Time | $t_{d(on)}$ | $V_{DD}$=-10V,$I_D$=-1A $V_{GS}$=-4.5V,$R_{GEN}$=3Ω | - | 9.8 | - | nS |
| Turn-on Rise Time | $t_r$ | | - | 4.9 | - | nS |
| Turn-Off Delay Time | $t_{d(off)}$ | | - | 20.5 | - | nS |
| Turn-Off Fall Time | $t_f$ | | - | 7 | - | nS |
| Total Gate Charge | $Q_g$ | $V_{DS}$=-10V,$I_D$=-3A, $V_{GS}$=-4.5V | - | 2.9 | - | nC |
| Gate-Source Charge | $Q_{gs}$ | | - | 0.45 | - | nC |
| Gate-Drain Charge | $Q_{gd}$ | | - | 0.75 | - | nC |
| **Drain-Source Diode Characteristics** | | | | | | |
| Diode Forward Voltage (Note 3) | $V_{SD}$ | $V_{GS}$=0V,$I_S$=-3A | - | - | -1.2 | V |
| Diode Forward Current (Note2) | $I_S$ | | - | - | -3 | A |

WildGoose Semiconductor

Notes:

1. Repetitive Rating: Pulse width limited by maximum junction temperature.
2. Surface Mounted on FR4 Board, t ≤ 10 sec.
3. Pulse Test: Pulse Width ≤ 300μs, Duty Cycle ≤ 2%.
4. Guaranteed by design, not subject to production

## Typical Performance Characteristics

**Figure1:** Output Characteristics

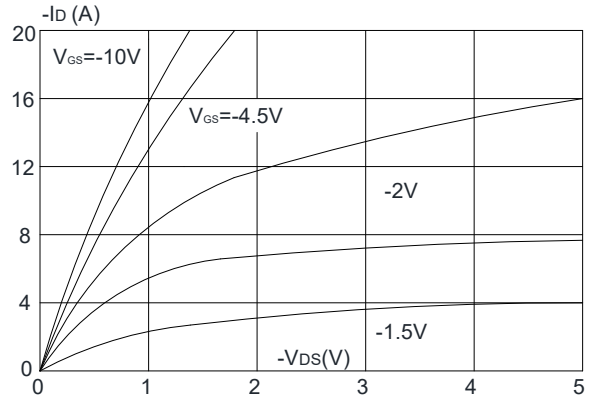


**Figure 2:** Typical Transfer Characteristics

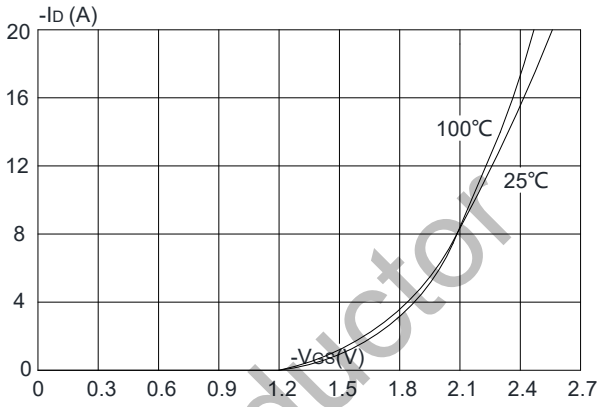


**Figure 3:**On-resistance vs. Drain Current

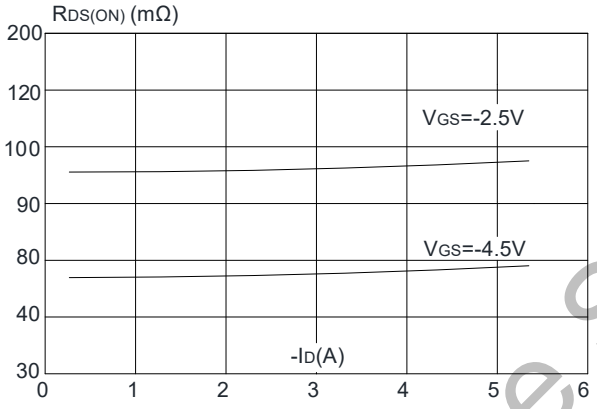


**Figure 4**: Body Diode Characteristics

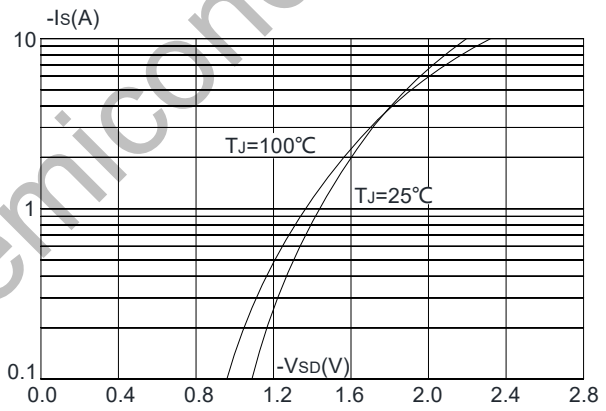


**Figure 5:** Gate Charge Characteristics

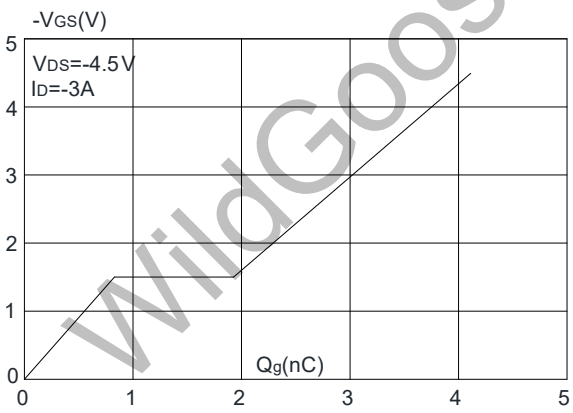


**Figure 6:** Capacitance Characteristics

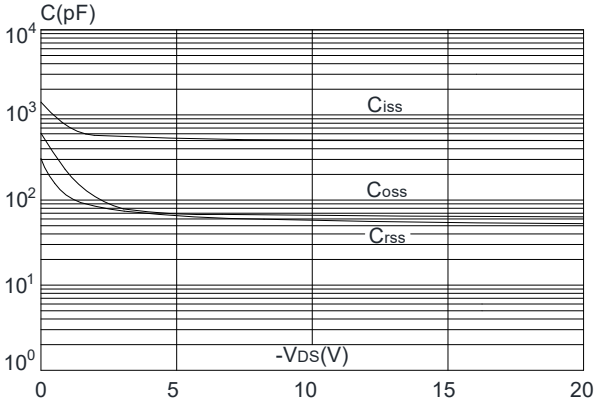


WildGoose Semiconductor

## Typical Performance Characteristics

**Figure 7:** Normalized Breakdown Voltage vs. Junction Temperature

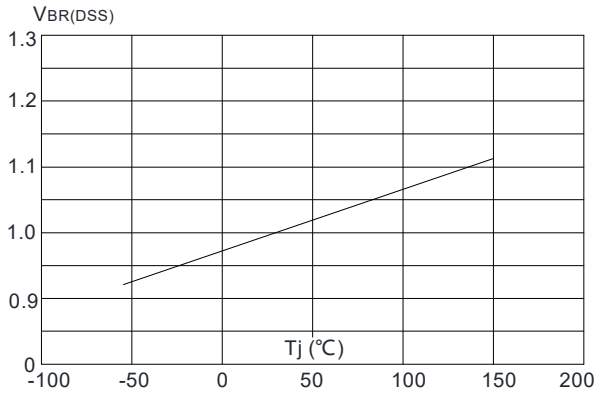


**Figure 8:** Normalized on Resistance vs. Junction Temperature

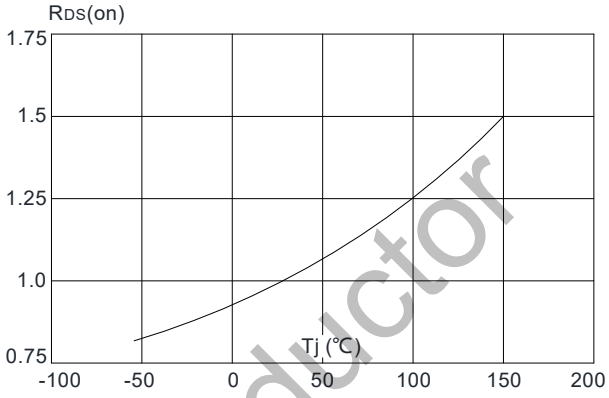


**Figure 9:** Maximum Safe Operating Area

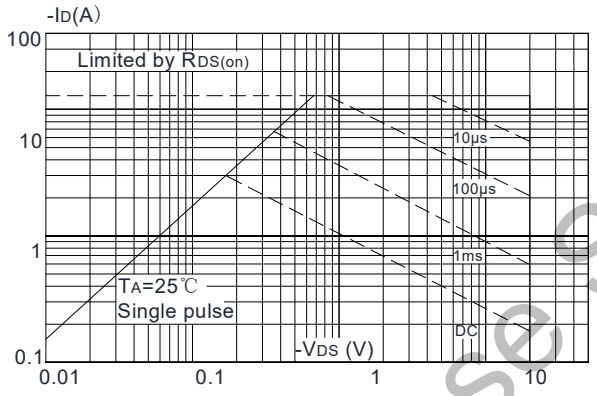


**Figure 10:** Maximum Continuous Drain Current vs. Ambient Temperature

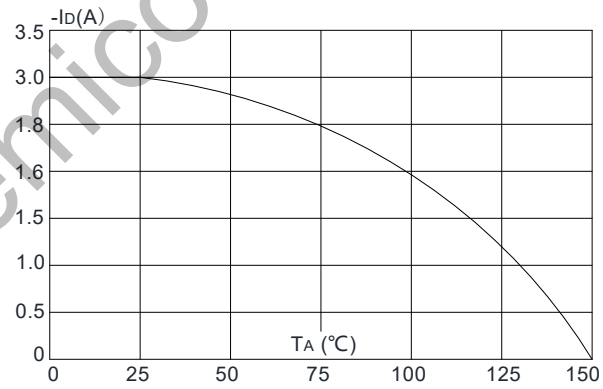


**Figure.11:** Maximum Effective Transient Thermal Impedance, Junction-to-Ambient

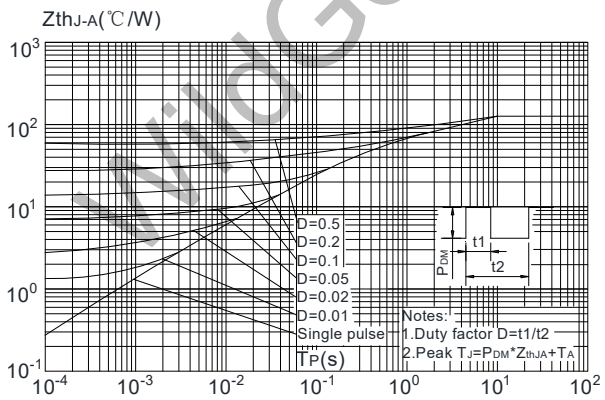


WildGoose Semiconductor

## Test Circuit

Gate Charge Test Circuit & Waveform

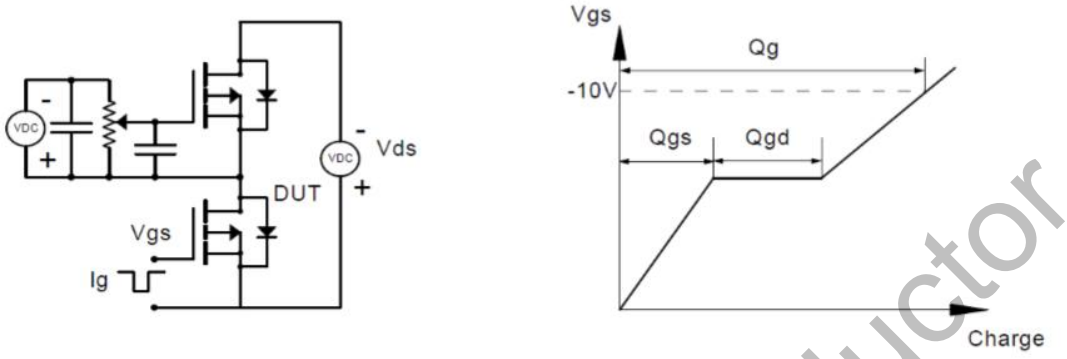


Resistive Switching Test Circuit & Waveforms

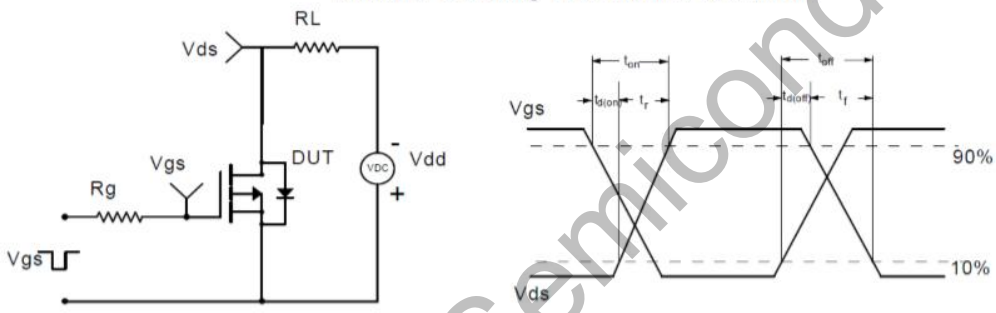


Unclamped Inductive Switching (UIS) Test Circuit & Waveforms

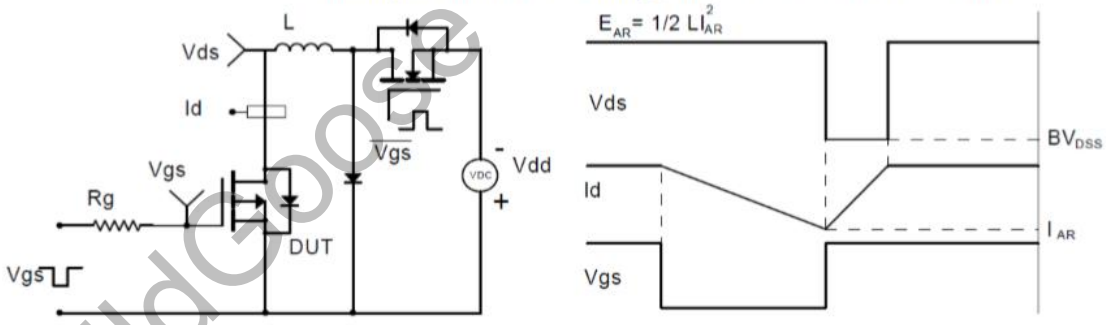


Diode Recovery Test Circuit & Waveforms

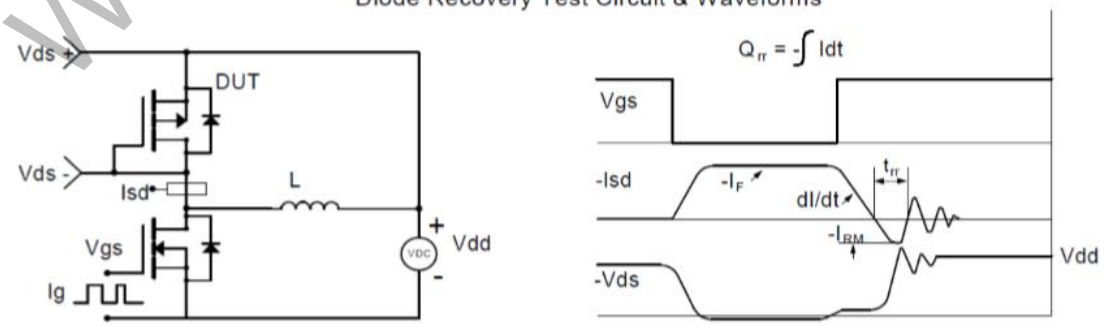


WildGoose Semiconductor

## Package Dimension

SOT-23-6

Unit: mm

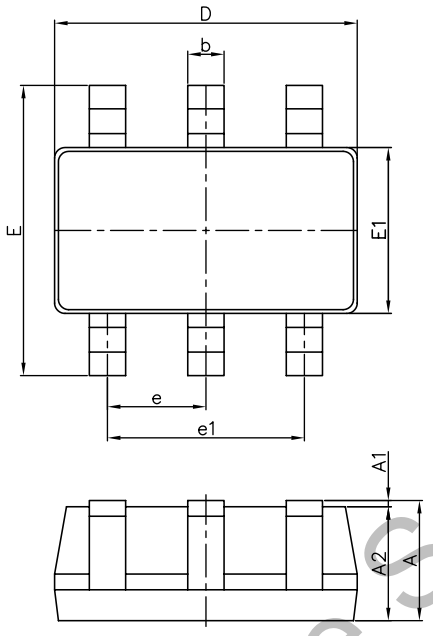


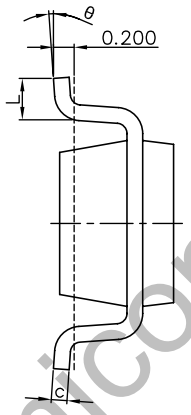


| Symbol | Dimensions In Millimeters | | Dimensions In Inches | |
|---|---|---|---|---|
| | Min. | Max. | Min. | Max. |
| A | 1.050 | 1.250 | 0.041 | 0.049 |
| A1 | 0.000 | 0.100 | 0.000 | 0.004 |
| A2 | 1.050 | 1.150 | 0.041 | 0.045 |
| b | 0.300 | 0.500 | 0.012 | 0.020 |
| c | 0.100 | 0.200 | 0.004 | 0.008 |
| D | 2.820 | 3.020 | 0.111 | 0.119 |
| E1 | 1.500 | 1.700 | 0.059 | 0.067 |
| E | 2.650 | 2.950 | 0.104 | 0.116 |
| e | 0.950(BSC) | | 0.037(BSC) | |
| e1 | 1.800 | 2.000 | 0.071 | 0.079 |
| L | 0.300 | 0.600 | 0.012 | 0.024 |
| θ | 0° | 8° | 0° | 8° |

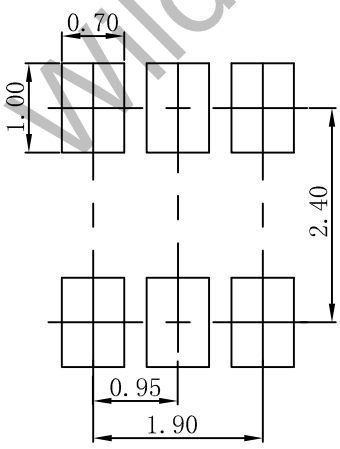


Note:
1.Controlling dimension:in millimeters.
2.General tolerance:± 0.05mm.
3.The pad layout is for reference purposes only.

WildGoose Semiconductor