WGD35P06

Features:

- ☐ Low Intrinsic Capacitances.
- ☐ Excellent Switching Characteristics.
- ☐ Extended Safe Operating Area.
- ☐ Unrivalled Gate Charge :Qg= 37nC (Typ.).
- ☐ BVDSS=-60V,I_D= -35A
- ☐ R_{DS}(on) : 25mΩ (Typ.) @V_G=-10V
- ☐ 100% Avalanche Tested

TO-252

RoHS COMPLIANT

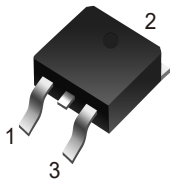

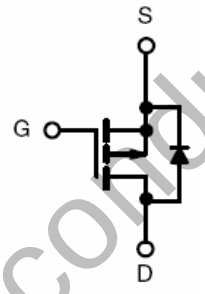

1. Gate (G)
2. Drain (D)
3. Source (S)

WildGoose Semiconductor

Absolute Maximum Ratings (T_C=25℃unless otherwise noted)

Parameter	Symbol	Limit	Unit
Drain-Source Voltage	V_{DS}	-60	V
Gate-Source Voltage	V_{GS}	±20	V
Drain Current-Continuous	I_D	-35	A
Drain Current-Continuous(T_C=100℃)	I_D (100℃)	-24.8	A
Pulsed Drain Current	I_{DM}	-90	A
Maximum Power Dissipation	P_D	90	W
Derating factor		0.8	W/℃
Single pulse avalanche energy (Note 5)	E_{AS}	300	mJ
Operating Junction and Storage Temperature Range	T_J,T_{STG}	-55 To 150	℃

Thermal Characteristic

Thermal Resistance, Junction-to-Case (Note 2)	$R_{\theta JC}$	1.25	℃/W

Electrical Characteristics (T_C=25℃unless otherwise noted)

Parameter	Symbol	Condition	Min	Typ	Max	Unit
Off Characteristics						
Drain-Source Breakdown Voltage	BV_{DSS}	V_{GS}=0V I_D=-250μA	-60	-	-	V
Zero Gate Voltage Drain Current	I_{DSS}	V_{DS}=-60V,V_{GS}=0V	-	-	-1	μA
Gate-Body Leakage Current	I_{GSS}	V_{GS}=±20V,V_{DS}=0V	-	-	±100	nA
On Characteristics (Note 3)						
Gate Threshold Voltage	$V_{GS(th)}$	V_{DS}=V_{GS},I_D=-250μA	-1	-1.8	-3.0	V
Drain-Source On-State Resistance	$R_{DS(ON)}$	V_{GS}=-10V, I_D=-15A	-	25	33	mΩ
Forward Transconductance	g_{FS}	V_{DS}=-10V,I_D=-20A	-	25	-	S
Dynamic Characteristics (Note4)						
Input Capacitance	C_{lss}	V_{DS}=-30V,V_{GS}=0V, F=1.0MHz	-	3384	-	PF
Output Capacitance	C_{oss}		-	225	-	PF
Reverse Transfer Capacitance	C_{rss}		-	178	-	PF
Switching Characteristics (Note 4)						
Turn-on Delay Time	$t_{d(on)}$	V_{DD}=-30V, R_L=1.5Ω, V_{GS}=-10V,R_G=3Ω	-	12	-	nS
Turn-on Rise Time	t_r		-	15	-	nS
Turn-Off Delay Time	$t_{d(off)}$		-	38	-	nS
Turn-Off Fall Time	t_f		-	15	-	nS
Total Gate Charge	Q_g	V_{DS}=-30,I_D=-20A, V_{GS}=-10V	-	37		nC
Gate-Source Charge	Q_{gs}		-	10.3		nC
Gate-Drain Charge	Q_{gd}		-	8.1		nC
Drain-Source Diode Characteristics						
Diode Forward Voltage (Note 3)	V_{SD}	V_{GS}=0V,I_S=-20A	-		-1.2	V
Diode Forward Current (Note 2)	I_S		-	-	-35	A
Reverse Recovery Time	t_{rr}	TJ = 25°C, IF =- 20A di/dt = -100A/μs (Note3)	-	47		nS
Reverse Recovery Charge	Qrr		-	53		nC

WidGoose Semiconductor

Notes:

1. Repetitive Rating: Pulse width limited by maximum junction temperature.
2. Surface Mounted on FR4 Board, t ≤ 10 sec.
3. Pulse Test: Pulse Width ≤ 300μs, Duty Cycle ≤ 2%.
4. Guaranteed by design, not subject to production
5. E_{AS} condition: Tj=25℃,V_{DD}=-20V,V_G=-10V,L=0.5mH,Rg=25Ω

Typical Electrical and Thermal Characteristics (Curves)

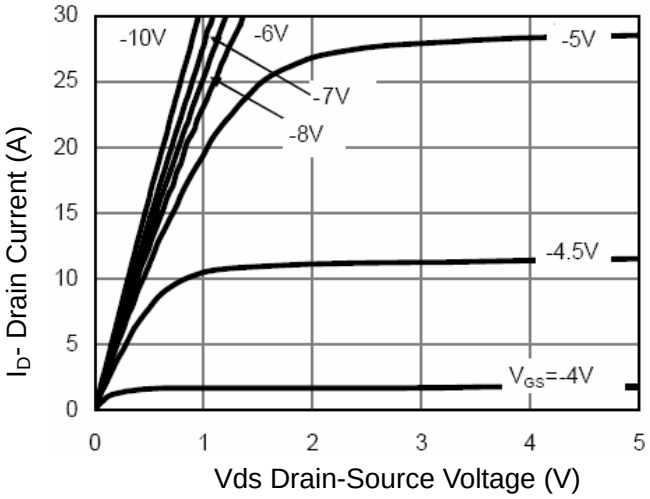

Figure 1 Output Characteristics

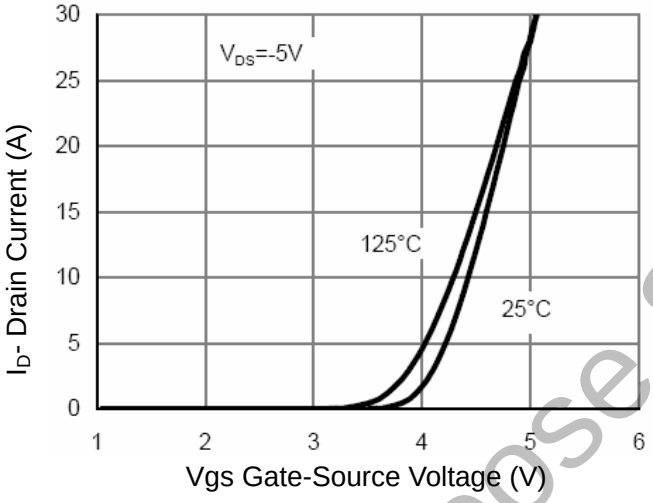

Figure 2 Transfer Characteristics

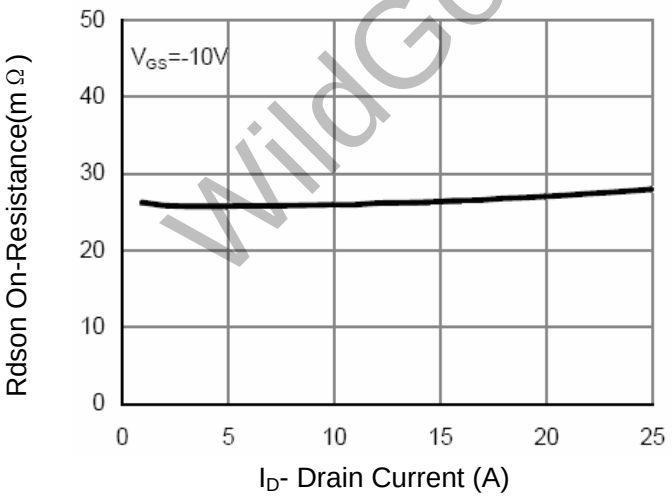

Figure 3 Rdson- Drain Current

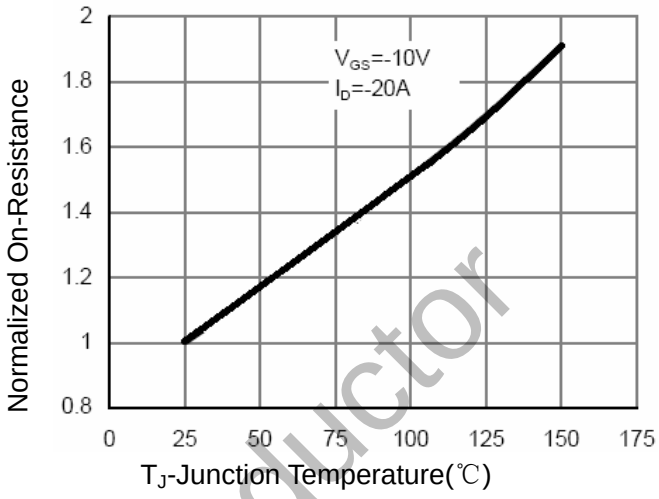

Figure 4 Rdson-Junction Temperature

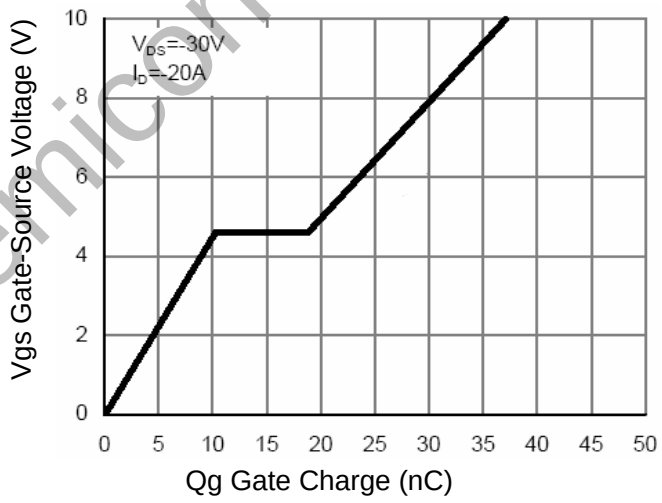

Figure 5 Gate Charge

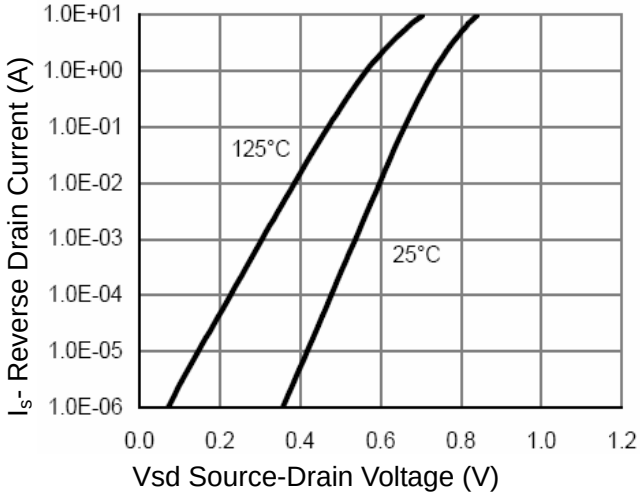

Figure 6 Source- Drain Diode Forward

WildGoose Semiconductor

Typical Electrical and Thermal Characteristics (Curves)

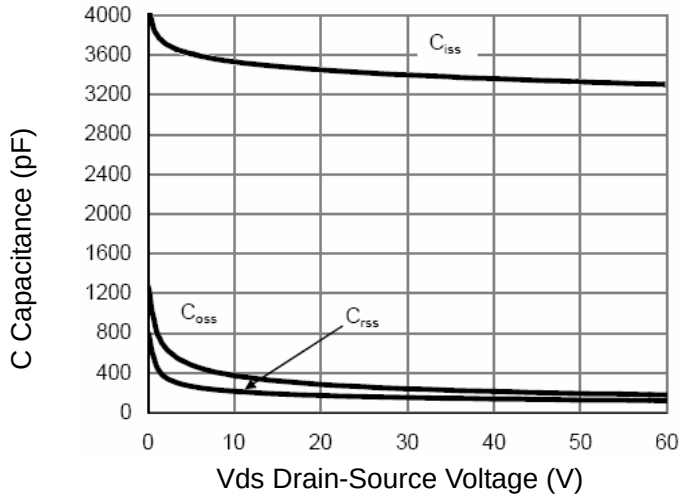

Figure 7 Capacitance vs Vds

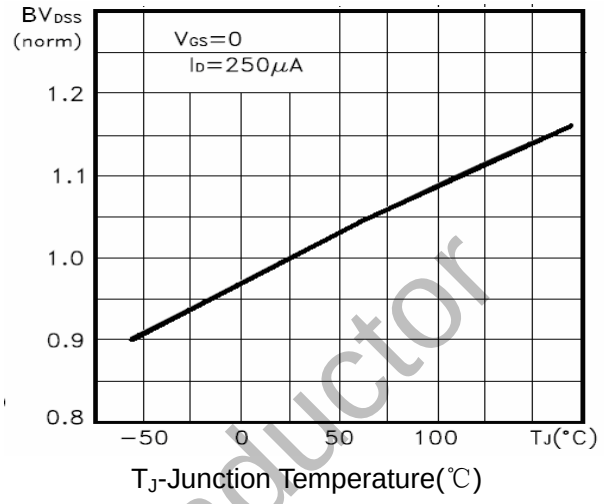

Figure 9 BV_{DSS} vs Junction Temperature

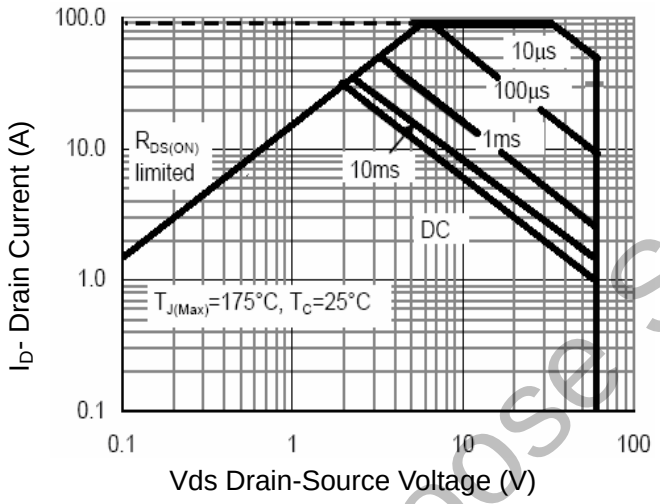

Figure 8 Safe Operation Area

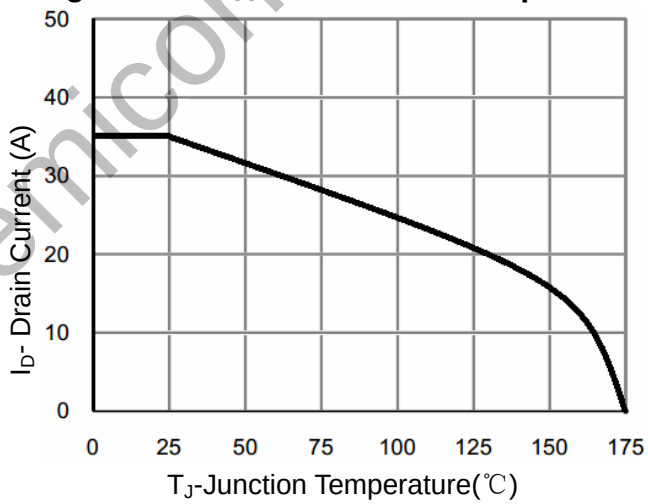

Figure 10 ID Current De-rating

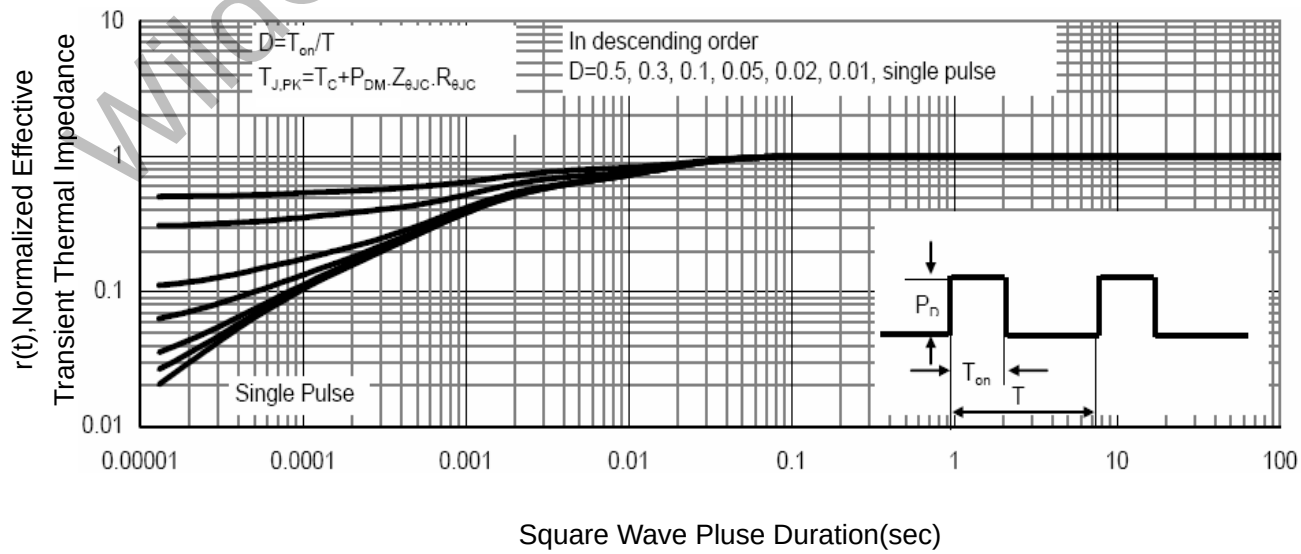

Figure 11 Normalized Maximum Transient Thermal Impedance

WinGoose Semiconductor

Test Circuit

1) $_{AS}$ Test Circuit

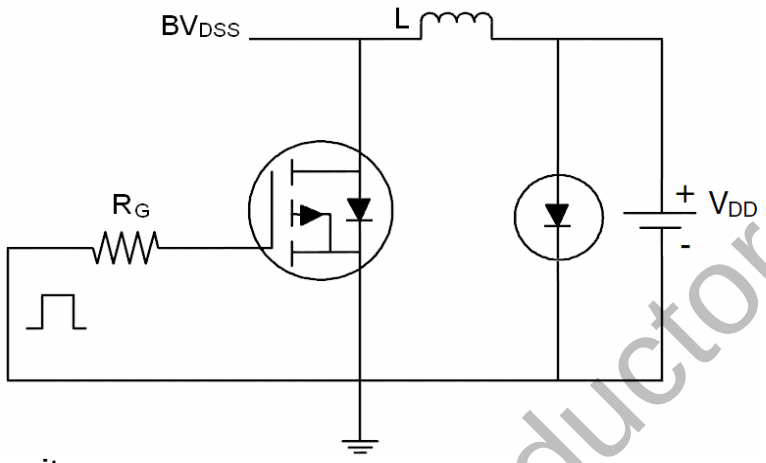

2) Gate C rge Test Circuit

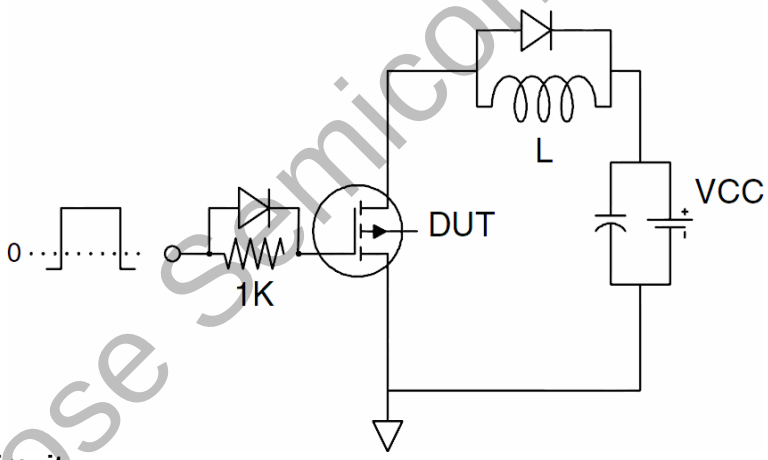

3) witch Time Test Circuit

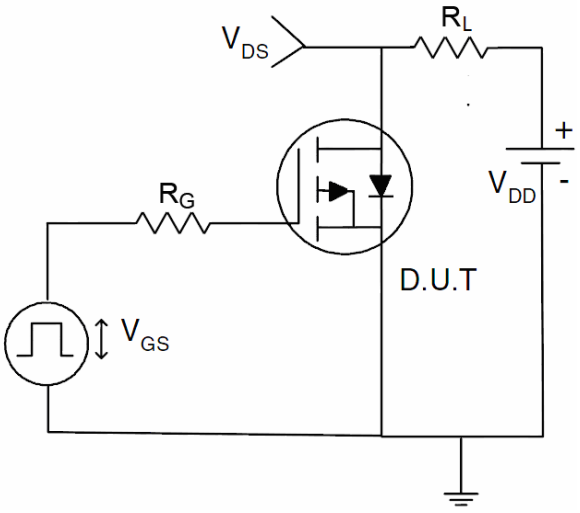

WildGoose Semiconductor

Package Dimension

TO-252

Units：mm

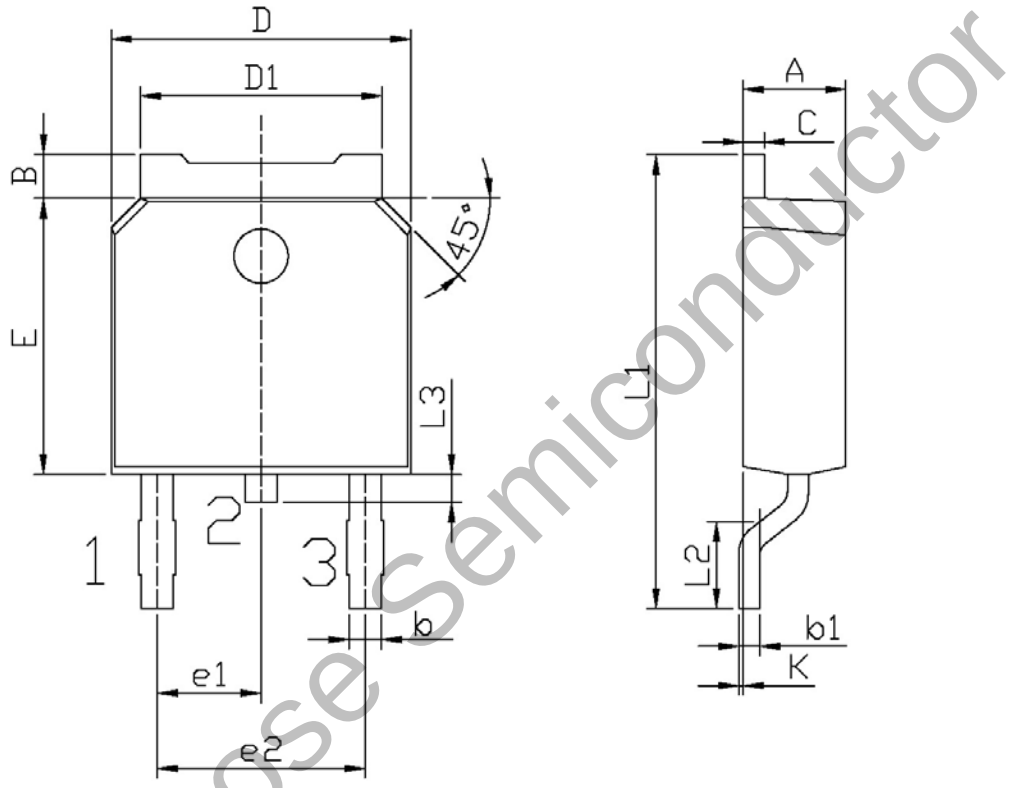

WildGoose Semiconductor

Symbol	Dimensions In Millimeters		Symbol	Dimensions In Millimeters	
	Min	Max		Min	Max
A	2.20	2.40	E	5.95	6.25
B	0.95	1.25	e1	2.24	2.34
b	0.70	0.90	e2	4.43	4.73
b1	0.45	0.55	L1	9.85	10.35
C	0.45	0.55	L2	1.25	1.75
D	6.45	6.75	L3	0.60	0.90
D1	5.20	5.40	K	0.00	0.10