WGD100N04

Features:

- ☐ Advanced Trench Technology.
- ☐ Excellent Switching Characteristics.
- ☐ Extended Safe Operating Area.
- ☐ Unrivalled Gate Charge :Qg=49 nC (Typ.).
- ☐ BVDSS=40V,I_D=100A
- ☐ R_{DS}(on) : 4.0mΩ (Typ.) @V_G=10V
- ☐ 100% Avalanche Tested

TO-252

RoHS COMPLIANT

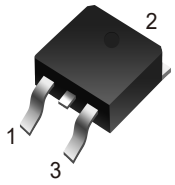

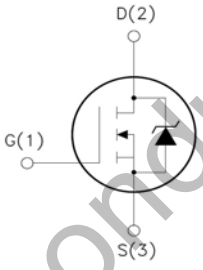

1.Gate (G)
2.Drain (D)
3.Source (S)

WILDGOOSE Semiconductor

Absolute Maximum Ratings (T_A=25℃unless otherwise noted)

Parameter	Symbol	Limit	Unit
Drain-Source Voltage	V_{DS}	40	V
Gate-Source Voltage	V_{GS}	±20	V
Drain Current-Continuous	I_D	100	A
Drain Current-Continuous(T_C=100℃)	I_D (100℃)	64	A
Pulsed Drain Current	I_{DM}	400	A
Maximum Power Dissipation	P_D	100	W
Single pulse avalanche energy (Note 5)	E_{AS}	350	mJ
Operating Junction and Storage Temperature Range	T_J,T_{STG}	-55 To 175	℃

Thermal Characteristic

Thermal Resistance,Junction-to-Case (Note 2)	$R_{\theta JC}$	1.25	℃/W

Electrical Characteristics (T_A=25℃unless otherwise noted)

Parameter	Symbol	Condition	Min	Typ	Max	Unit
Off Characteristics						
Drain-Source Breakdown Voltage	BV_{DSS}	V_{GS}=0V I_D=250μA	40	-	-	V
Zero Gate Voltage Drain Current	I_{DSS}	V_{DS}=30V,V_{GS}=0V	-	-	1	μA
Gate-Body Leakage Current	I_{GSS}	V_{GS}=±20V,V_{DS}=0V	-	-	±100	nA
On Characteristics (Note 3)						
Gate Threshold Voltage	$V_{GS(th)}$	V_{DS}=V_{GS},I_D=250μA	1	1.8	3	V
Drain-Source On-State Resistance	$R_{DS(ON)}$	V_{GS}=10V, I_D=30A	-	4.0	4.5	mΩ
Gate resistance	R_G	F=1.0MHz	-	1.6	-	Ω
Forward Transconductance	g_{FS}	V_{DS}=10V,I_D=20A	50	-	-	S
Dynamic Characteristics (Note4)						
Input Capacitance	C_{lss}	V_{DS}=25V,V_{GS}=0V, F=1.0MHz		2720		PF
Output Capacitance	C_{oss}			378		PF
Reverse Transfer Capacitance	C_{rss}			226		PF
Switching Characteristics (Note 4)						
Turn-on Delay Time	$t_{d(on)}$	V_{GS}=10V,V_{DS}=20V R_L=0.75Ω,R_{GEN}=3Ω	-	11	-	nS
Turn-on Rise Time	t_r		-	10	-	nS
Turn-Off Delay Time	$t_{d(off)}$		-	38	-	nS
Turn-Off Fall Time	t_f		-	11	-	nS
Total Gate Charge	Q_g	V_{GS}=10V,V_{DS}=15V,I_D=20A		49		nC
Gate-Source Charge	Q_{gs}			9		nC
Gate-Drain Charge	Q_{gd}			18		nC
Drain-Source Diode Characteristics						
Diode Forward Voltage (Note 3)	V_{SD}	V_{GS}=0V,I_S=20A	-	-	1.2	V
Diode Forward Current (Note 2)	I_S	-		-	100	A
Reverse Recovery Time	t_{rr}	TJ = 25°C, I_F =20A di/dt = 100A/μs (Note3)	-	58	-	nS
Reverse Recovery Charge	Qrr		-	115	-	nC
Forward Turn-On Time	t_{on}	Intrinsic turn-on time is negligible (turn-on is dominated by LS+LD)				

WildGoose Semiconductor

Notes:

1. Repetitive Rating: Pulse width limited by maximum junction temperature.
2. Surface Mounted on FR4 Board, t ≤ 10 sec.
3. Pulse Test: Pulse Width ≤ 300μs, Duty Cycle ≤ 2%.
4. Guaranteed by design, not subject to production
5. EAS condition：Tj=25℃,V_{DD}=15V,V_G=10V,L=0.5mH,Rg=25Ω

Typical Electrical and Thermal Characteristics (Curves)

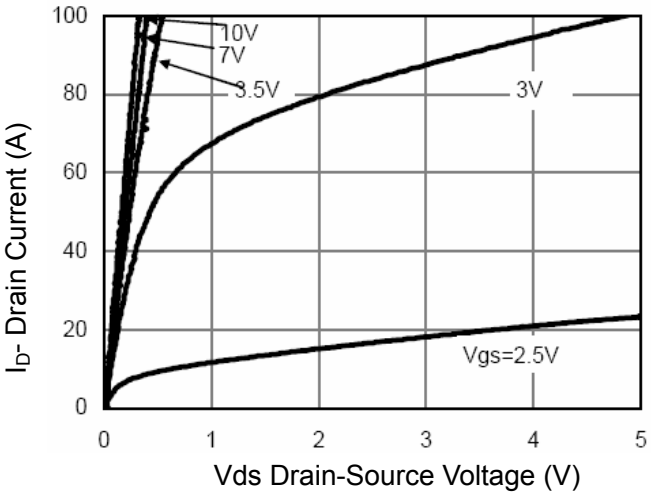

Figure 1 Output Characteristics

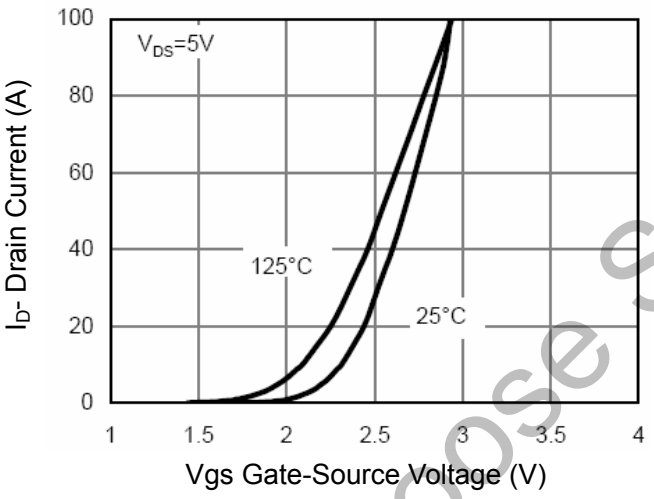

Figure 2 Transfer Characteristics

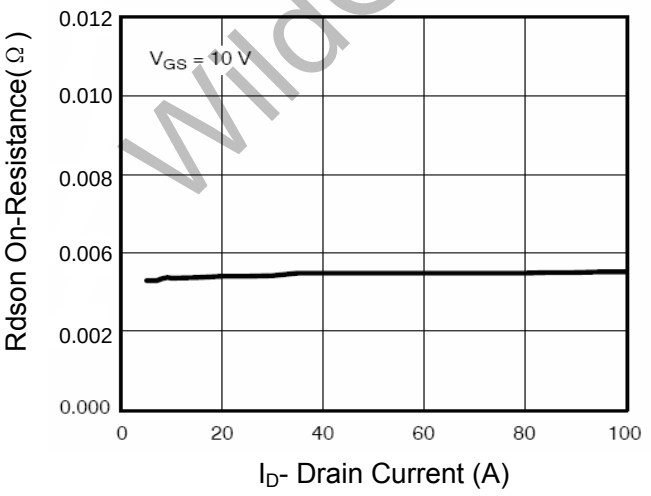

Figure 3 Rdson- Drain Current

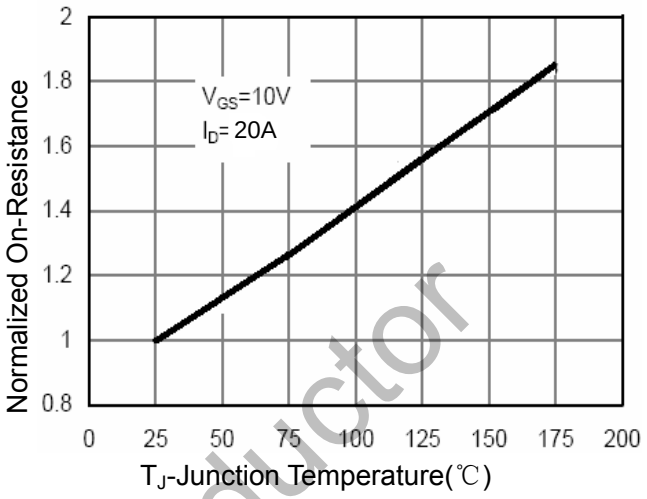

Figure 4 Rdson-Junction Temperature

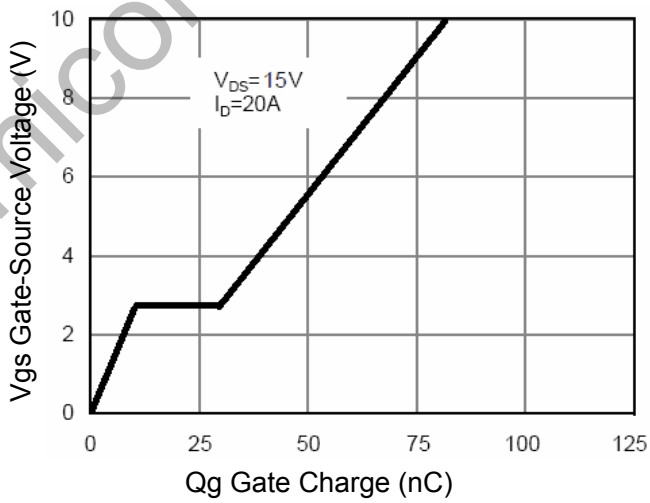

Figure 5 Gate Charge

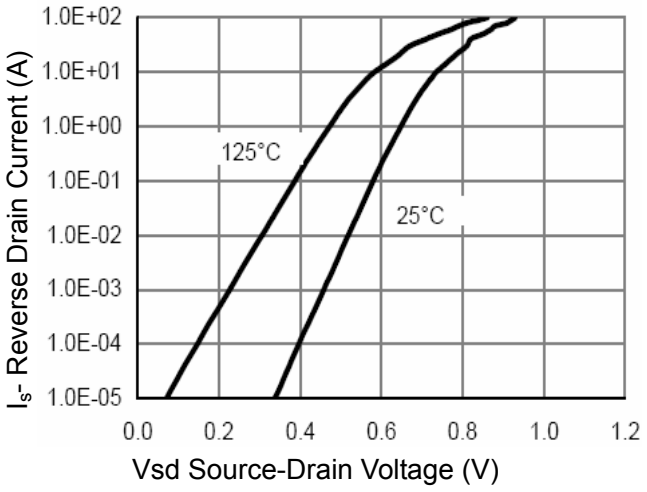

Figure 6 Source- Drain Diode Forward

WildGoose Semiconductor

Typical Electrical and Thermal Characteristics (Curves)

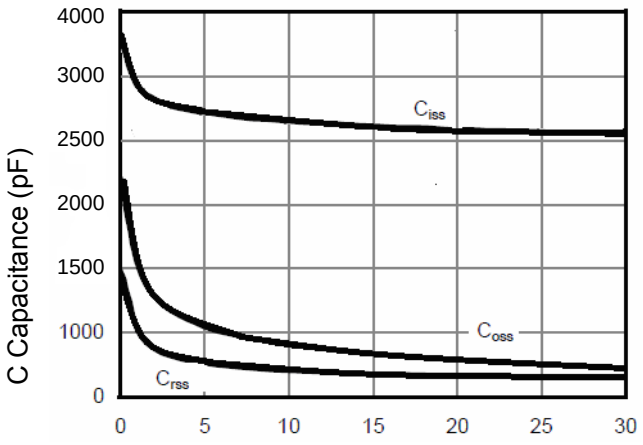

Figure 7 Capacitance vs Vds

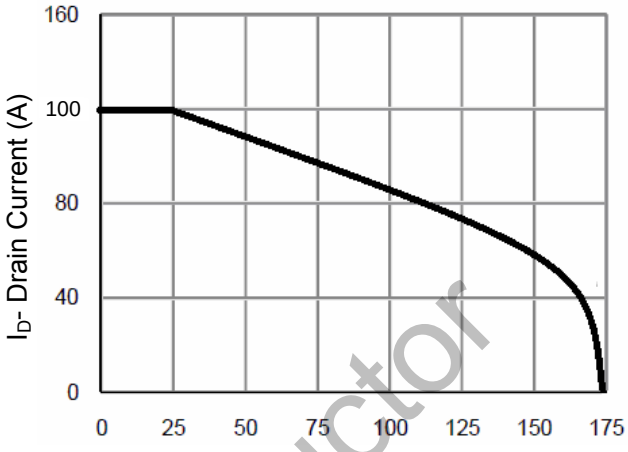

Figure 9 Current De-rating

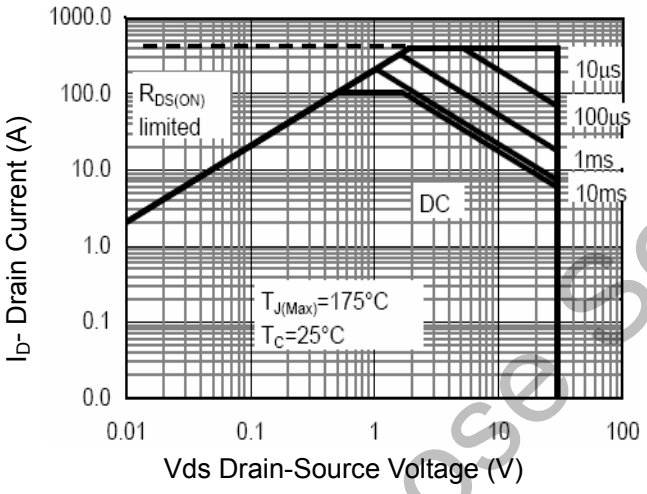

Figure 8 Safe Operation Area

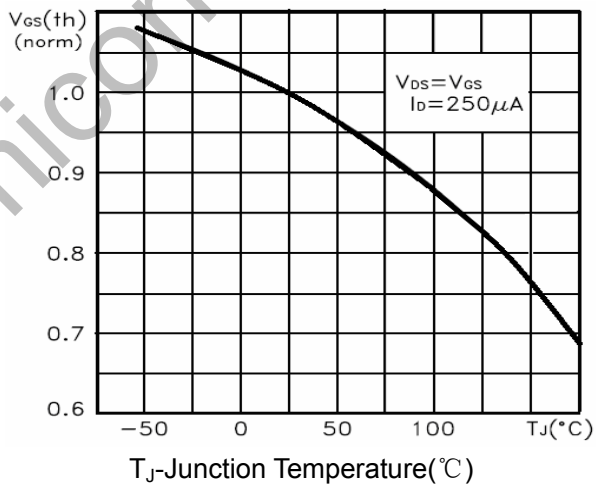

Figure 10 $V_{GS(th)}$ vs Junction Temperature

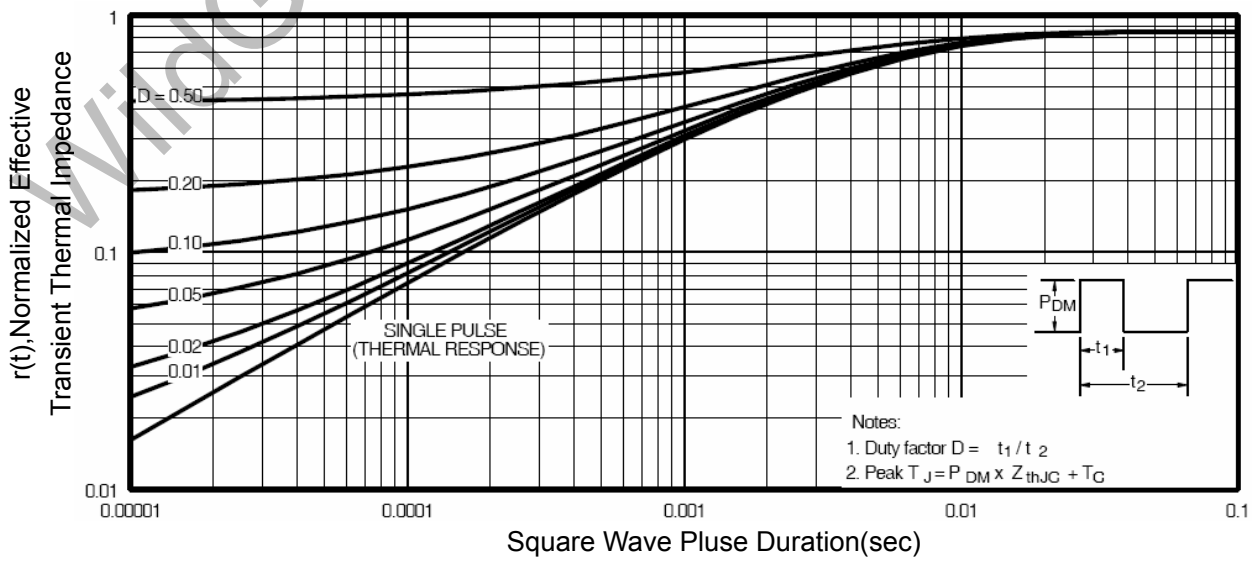

Figure 11 Normalized Maximum Transient Thermal Impedance

WinGoose Semiconductor

Test Circuit

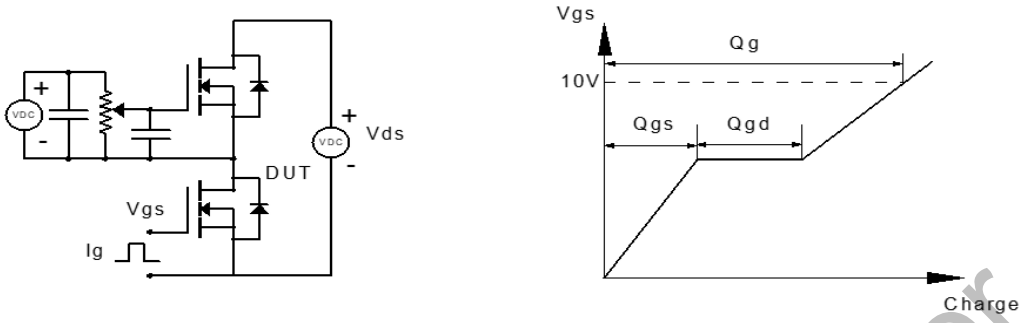

Figure 1: Gate Charge Test Circuit & Waveform

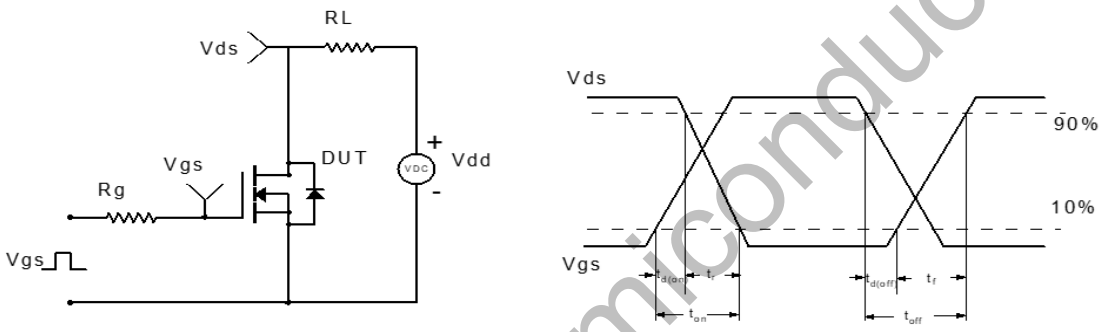

Figure 2: Resistive Switching Test Circuit & Waveform

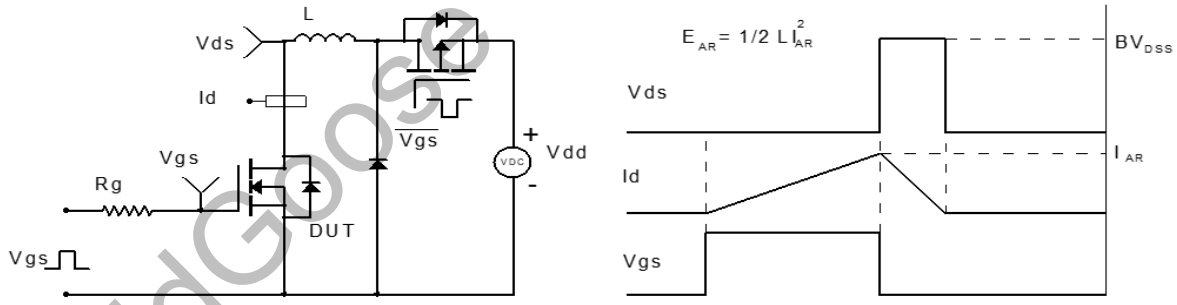

Figure 3: Unclamped Inductive Switching Test Circuit& Waveform

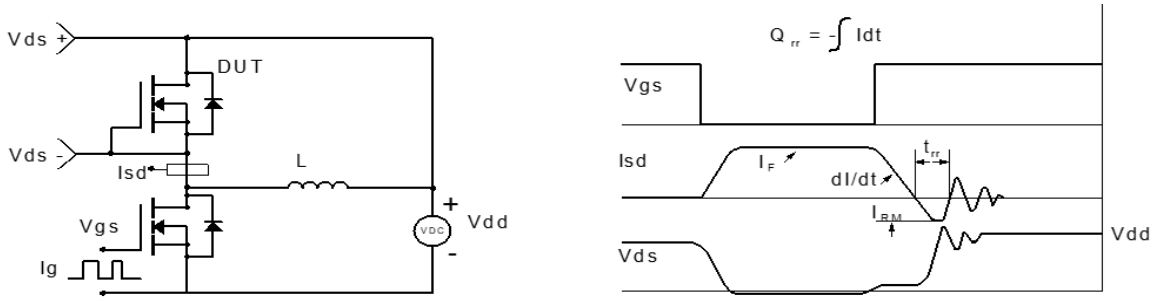

Figure 4: Diode Recovery Test Circuit & Waveform

WildGoose Semiconductor

Package Dimension

TO-252

Unit: mm

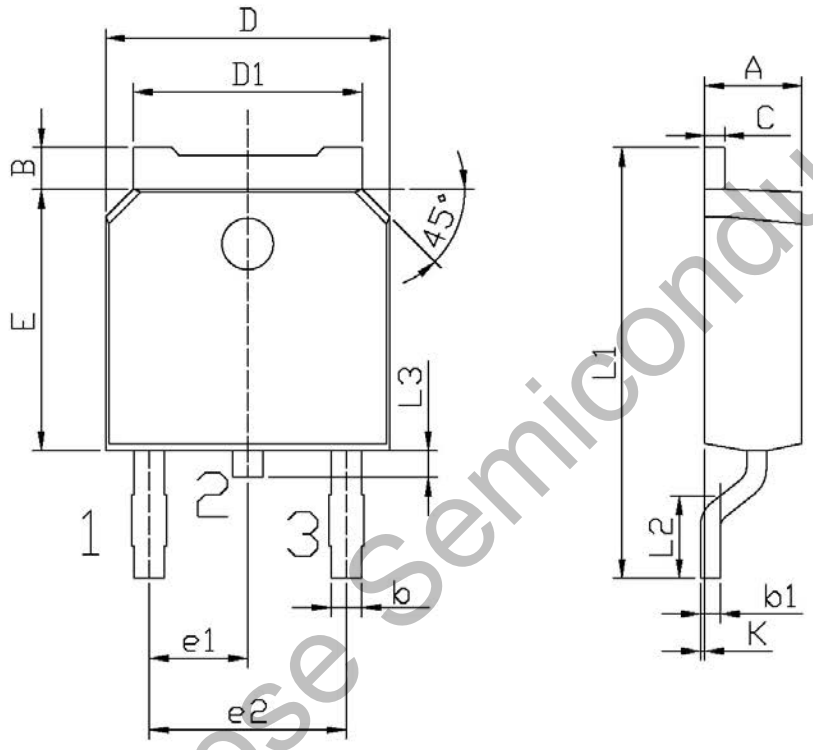

WldGoose Semiconductor

单位：mm

Symbol	Dimensions In Millimeters		Symbol	Dimensions In Millimeters	
	Min	Max		Min	Max
A	2.20	2.40	E	5.95	6.25
B	0.95	1.25	e1	2.24	2.34
b	0.70	0.90	e2	4.43	4.73
b1	0.45	0.55	L1	9.85	10.35
C	0.45	0.55	L2	1.25	1.75
D	6.45	6.75	L3	0.60	0.90
D1	5.20	5.40	K	0.00	0.10