WGEN07P20

Features:

- ☐ Advanced Trench Technology
- ☐ Ultra Low Gate Charge:Qg=26nC (Typ.)
- ☐ VDSS=-20V, ID=-20A
- ☐ Rds(on):6.8mΩ(Typ.) @VG=-4.5V
- ☐ 100% Avalanche Tested

PDFN3*3

RoHS COMPLIANT



Schematic diagram

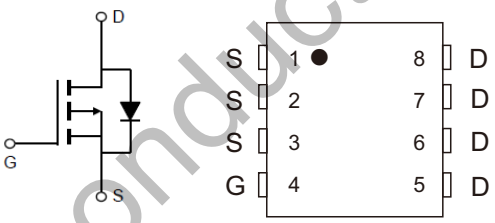

Absolute Maximum Ratings (@ T_C = 25°C unless otherwise specified)

Symbol	Parameter		Max.	Units
V_{DSS}	Drain-Source Voltage		-20	V
V_{GSS}	Gate-Source Voltage		±12	V
I_D	Continuous Drain Current	T_C = 25℃	-20	A
		T_C= 100℃	-10	A
I_{DM}	Pulsed Drain Current note1		-50	A
E_{AS}	Single Pulsed Avalanche Energy note2		35	mJ
P_D	Power Dissipation	T_C = 25℃	15	W
$R_{\theta JC}$	Thermal Resistance, Junction to Case		8.2	℃/W
T_J, T_{STG}	Operating and Storage Temperature Range		-55 to +150	℃

WildGoose Semiconductor

Electrical Characteristics (T_J=25℃ unless otherwise specified)

Symbol	Parameter	Test Condition	Min.	Typ.	Max.	Units
Off Characteristics						
$V_{(BR)DSS}$	Drain-Source Breakdown Voltage	V_{GS}=0V, I_D= -250μA	-20	-	-	V
I_{DSS}	Zero Gate Voltage Drain Current	V_{DS}= -20V, V_{GS}=0V,	-	-	-1	μA
I_{GSS}	Gate to Body Leakage Current	V_{DS}=0V, V_{GS}= ±12V	-	-	±100	nA
On Characteristics						
$V_{GS(th)}$	Gate Threshold Voltage	V_{DS}=V_{GS}, I_D= -250μA	-0.4	-0.7	-1.0	V
$R_{DS(on)}$	Static Drain-Source on-Resistance Note3	V_{GS}= -4.5V, I_D= -9A	-	6.8	9.0	mΩ
		V_{GS}= -2.5V, I_D= -7A	-	10	14	
Dynamic Characteristics						
C_{iss}	Input Capacitance	V_{DS}= -10V, V_{GS}=0V, f=1.0MHz	-	1700	-	pF
C_{oss}	Output Capacitance		-	191	-	pF
C_{rss}	Reverse Transfer Capacitance		-	168	-	pF
Q_g	Total Gate Charge	V_{DD}= -10V, I_D= -5A, V_{GS}= -4.5V	-	26	-	nC
Q_{gs}	Gate-Source Charge		-	2.5	-	nC
Q_{gd}	Gate-Drain(“Miller”) Charge		-	3	-	nC
Switching Characteristics						
$t_{d(on)}$	Turn-on Delay Time	V_{DD} = -10V, I_D= -5A, V_{GS}= -4.5V,R_{GEN}=10Ω	-	13	-	ns
t_r	Turn-on Rise Time		-	52	-	ns
$t_{d(off)}$	Turn-off Delay Time		-	103	-	ns
t_f	Turn-off Fall Time		-	81	-	ns
Drain-Source Diode Characteristics and Maximum Ratings						
I_S	Maximum Continuous Drain to Source Diode Forward Current		-	-	-20	A
I_{SM}	Maximum Pulsed Drain to Source Diode Forward Current		-	-	-50	A
V_{SD}	Drain to Source Diode Forward Voltage	V_{GS}=0V, I_S= -10A	-	-	-1.2	V
trr	Reverse Recovery Time	I_F= -3A, di/dt=100A/μs	-	31	-	ns
Qrr	Reverse Recovery Charge		-	4	-	nC

Notes:1. Repetitive Rating: Pulse Width Limited by Maximum Junction Temperature

2. E_{AS} condition: Starting T_J=25℃, V_{DD}= -10V, V_{GS}= -4.5V, Rg=25Ω, L=0.5mH, I_{AS}= -10A

3. Pulse Test: Pulse Width≤300μs, Duty Cycle≤2%

WinGoose Semiconductor

Typical Performance Characteristics

Figure 1: Output Characteristics

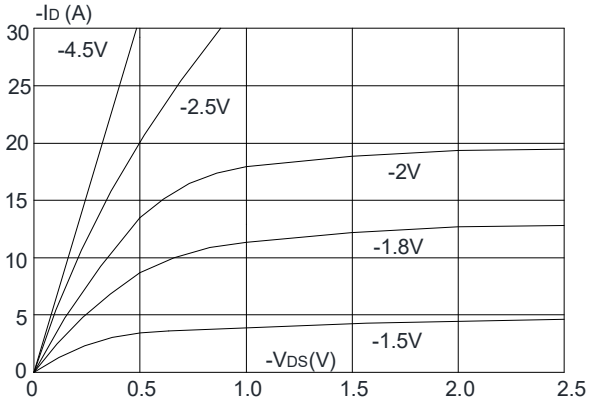

Figure 2: Typical Transfer Characteristics

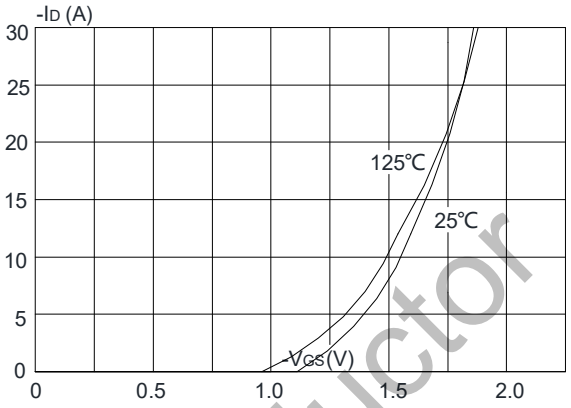

Figure 3: On-resistance vs. Drain Current

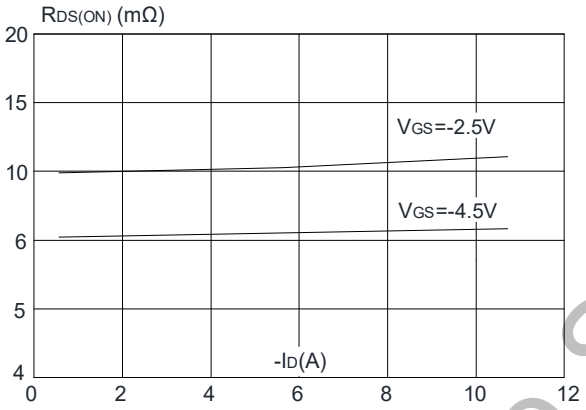

Figure 4: Body Diode Characteristics

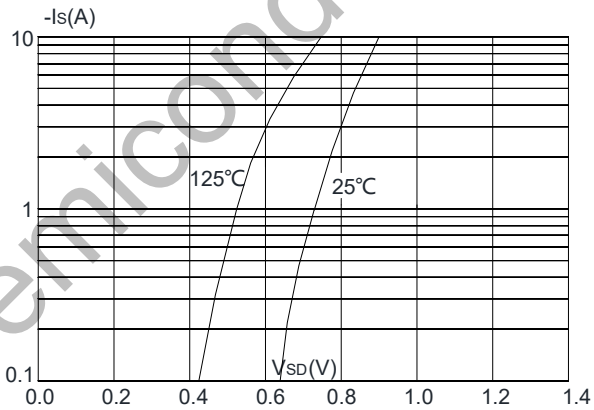

Figure 5: Gate Charge Characteristics

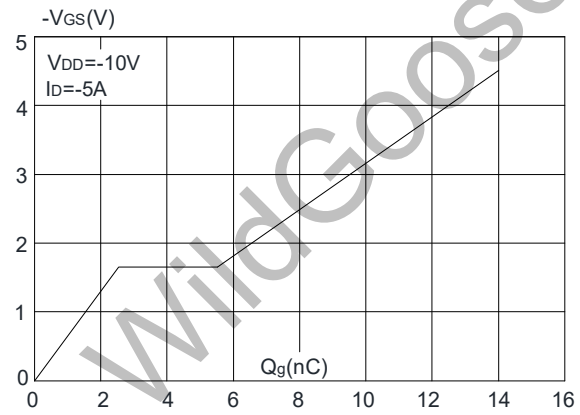

Figure 6: Capacitance Characteristics

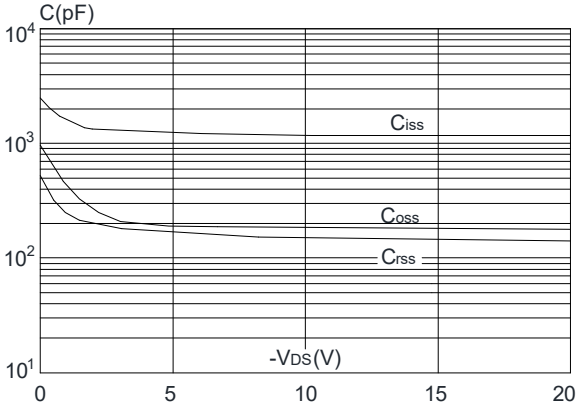

WildGoose Semiconductor

Typical Performance Characteristics

Figure 7: Normalized Breakdown Voltage vs. Junction Temperature

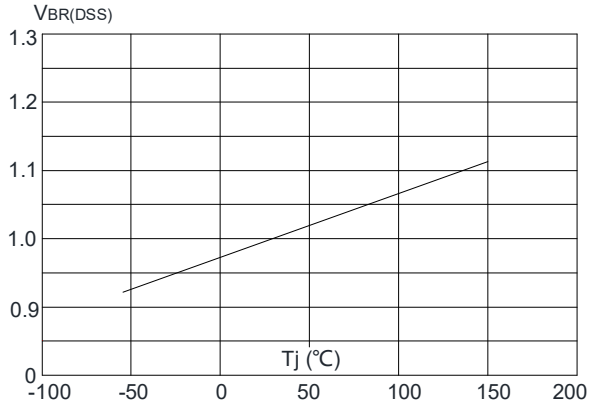

Figure 8: Normalized on Resistance vs. Junction Temperature

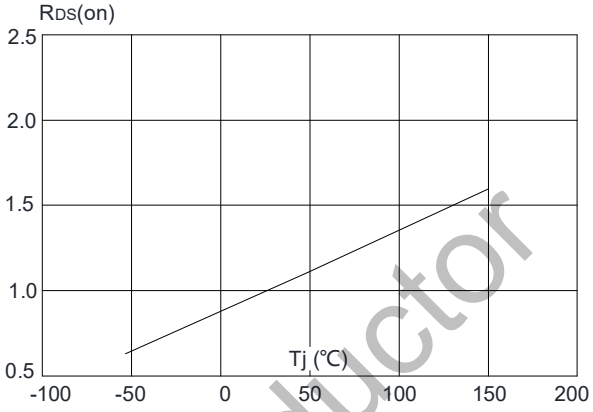

Figure 9: Maximum Safe Operating Area

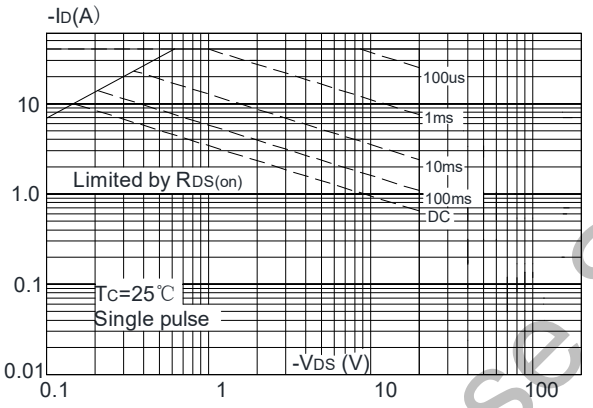

Figure 10: Maximum Continuous Drain Current vs. Case Temperature

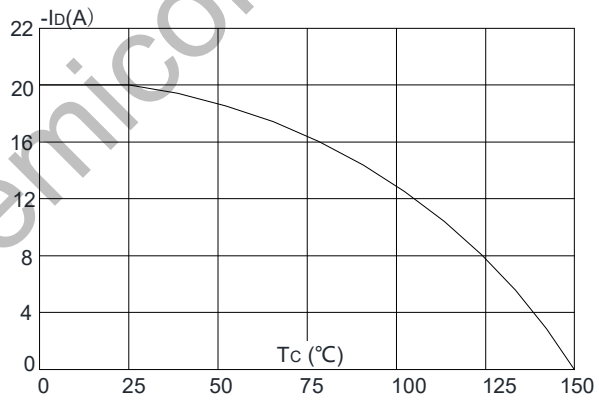

Figure 11: Maximum Effective Transient Thermal Impedance, Junction-to-Case

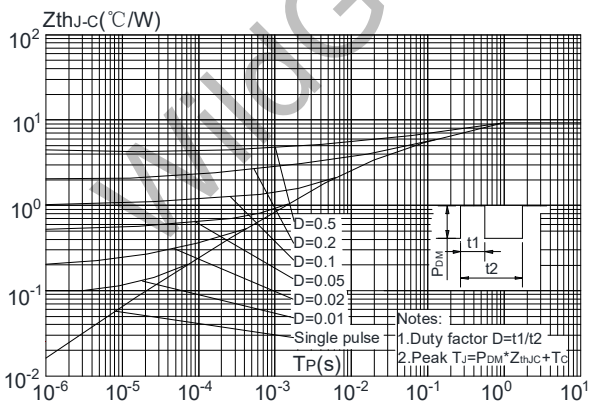

WGGoose Semiconductor

Test Circuit

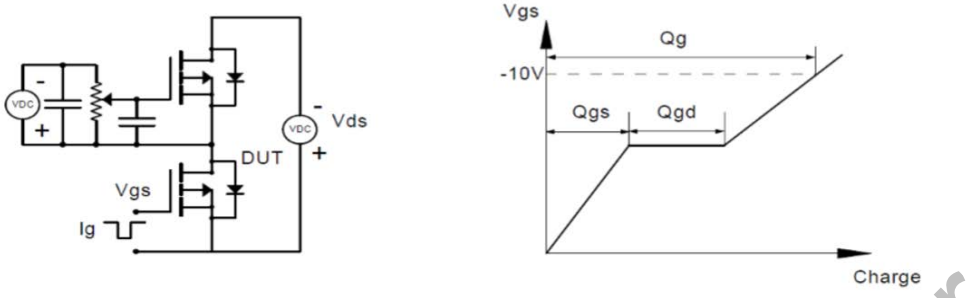

Figure 1: Gate Charge Test Circuit & Waveform

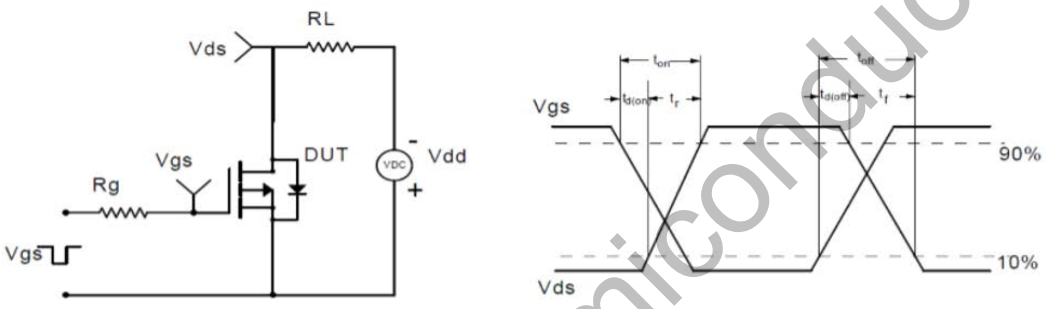

Figure 2: Resistive Switching Test Circuit & Waveform

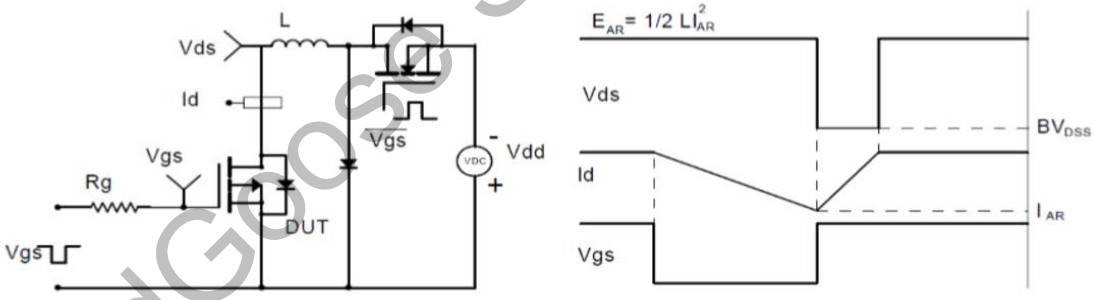

Figure 3: Unclamped Inductive Switching Test Circuit& Waveform

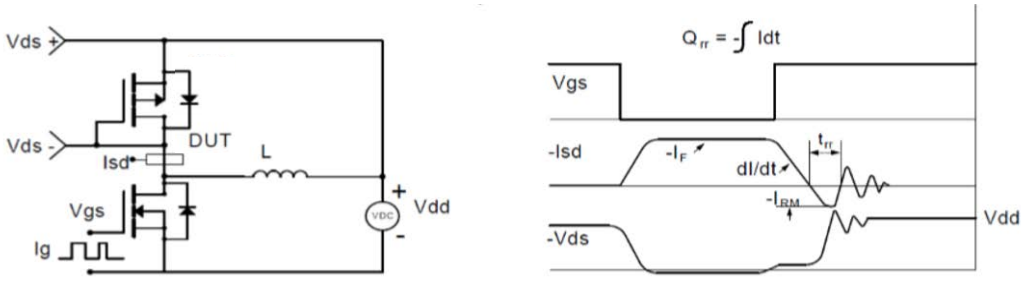

Figure 4: Diode Recovery Test Circuit & Waveform

WildGoose Semiconductor

Package Dimension

PDFN3*3

Unit:mm

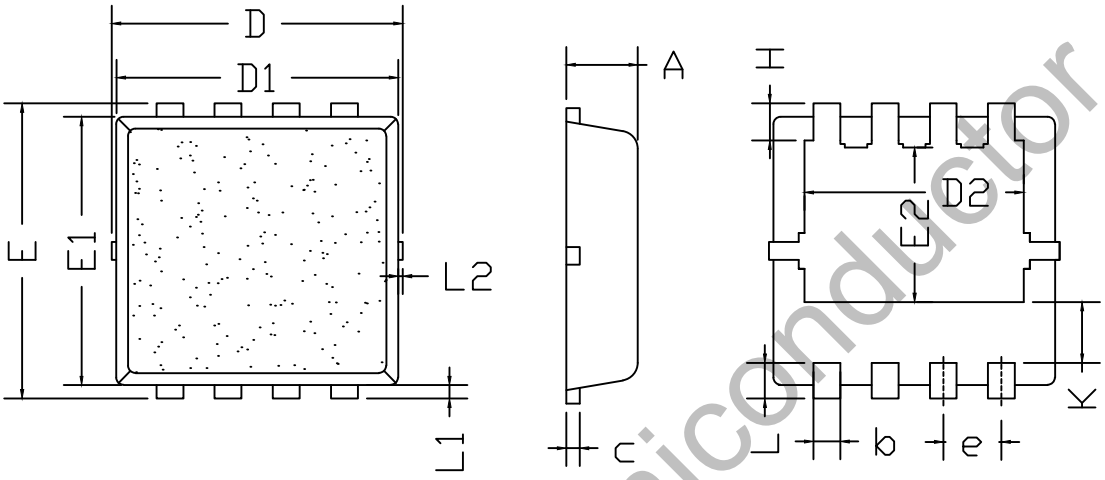

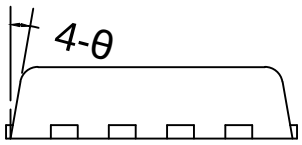

SYMBOL	mm		
	MIN	NOM	MAX
*A	0.70	0.80	0.90
*b	0.25	0.30	0.35
*c	0.20	0.25	0.30
D	3.25BSC		
*D1	3.05	3.15	3.25
D2	2.35	2.45	2.55
*e	0.55	0.65	0.75
E	3.30BSC		
*E1	2.90	3.00	3.10
E2	1.64	1.74	1.84
H	0.32	0.42	0.52
K	0.58	0.68	0.78
L	0.30	0.40	0.50
L1	0.10	0.15	0.20
L2	–	–	0.12
θ	8°	10°	12°

WildGoose Semiconductor