WGD045V60

TO-252

RoHS COMPLIANT

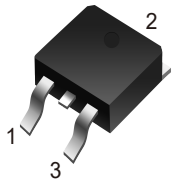

Features:

- ☐ Advanced Trench Technology
- ☐ Excellent Switching Characteristics.
- ☐ Extended Safe Operating Area.
- ☐ Unrivalled Gate Charge :Qg=103nC (Typ.).
- ☐ BVDSS=60V,I_D=120A
- ☐ R_{DS}(on) : 4.5mΩ (Typ.) @V_G=10V
- ☐ 100% Avalanche Tested

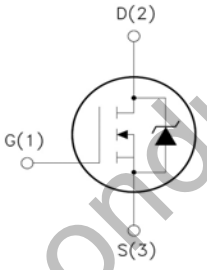

1.Gate (G)
2.Drain (D)
3.Source (S)

Absolute Maximum Ratings (T_C=25℃ unless otherwise specified)

Symbol	Parameter		Max.	Units
V_{DSS}	Drain-Source Voltage		60	V
V_{GSS}	Gate-Source Voltage		±25	V
I_D	Continuous Drain Current	T_C = 25℃	120	A
		T_C = 100℃	78	A
I_{DM}	Pulsed Drain Current note1		480	A
EAS	Single Pulsed Avalanche Energy note2		225	mJ
P_D	Power Dissipation	T_C = 25℃	181	W
$R_{\theta JC}$	Thermal Resistance, Junction to Case		0.83	℃/W
T_J, T_{STG}	Operating and Storage Temperature Range		-55 to +175	℃

WildGoose Semiconductor

Electrical Characteristics (T_J=25℃ unless otherwise specified)

Symbol	Parameter	Test Condition	Min.	Typ.	Max.	Units
Off Characteristic						
$V_{(BR)DSS}$	Drain-Source Breakdown Voltage	V_{GS}=0V, I_D=250μA	60	-	-	V
I_{DSS}	Zero Gate Voltage Drain Current	V_{DS}=60V, V_{GS} = 0V,	-	-	1.0	μA
I_{GSS}	Gate to Body Leakage Current	V_{DS}=0V, V_{GS} = ±25V	-	-	±100	nA
On Characteristics						
$V_{GS(th)}$	Gate Threshold Voltage	V_{DS}=V_{GS}, I_D=250μA	2	3	4	V
$R_{DS(on)}$	Static Drain-Source on-Resistance note3	V_{GS}=10V, I_D=30A	-	4.5	5.9	mΩ
Dynamic Characteristics						
C_{iss}	Input Capacitance	V_{DS}=25V, V_{GS}=0V, f=1.0MHz	-	5672	-	pF
C_{oss}	Output Capacitance		-	392	-	pF
C_{rss}	Reverse Transfer Capacitance		-	352	-	pF
Q_g	Total Gate Charge	V_{DS}=30V, I_D=30A, V_{GS}=10V	-	103	-	nC
Q_{gs}	Gate-Source Charge		-	15	-	nC
Q_{gd}	Gate-Drain(“Miller”) Charge		-	32	-	nC
Switching Characteristics						
$t_{d(on)}$	Turn-on Delay Time	V_{DS}=30V, I_D=30A, R_G=1.8Ω, V_{GS}=10V	-	12	-	ns
t_r	Turn-on Rise Time		-	8	-	ns
$t_{d(off)}$	Turn-off Delay Time		-	49	-	ns
t_f	Turn-off Fall Time		-	15	-	ns
Drain-Source Diode Characteristics and Maximum Ratings						
I_S	Maximum Continuous Drain to Source Diode Forward Current		-	-	120	A
I_{SM}	Maximum Pulsed Drain to Source Diode Forward Current		-	-	480	A
V_{SD}	Drain to Source Diode Forward Voltage	V_{GS}=0V, I_S=30A	-	-	1.2	V
trr	Body Diode Reverse Recovery Time	I_F=30A, dI/dt=100A/μs	-	27	-	ns
Qrr	Body Diode Reverse Recovery Charge		-	48	-	nC

Notes:1. Repetitive Rating: Pulse Width Limited by Maximum Junction Temperature

2. EAS condition : T_J=25℃, V_{DD}=30V, V_G=10V, L=0.5mH, Rg=25Ω, I_{AS}=30A

3. Pulse Test: Pulse Width≤300μs, Duty Cycle≤0.5%

WildGoose Semiconductor

Typical Performance Characteristics

Figure1: Output Characteristics

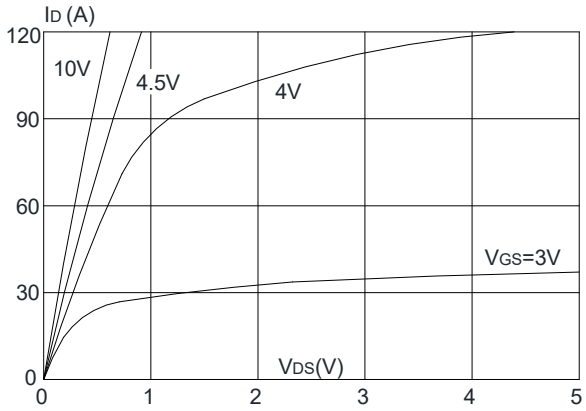

Figure 2: Typical Transfer Characteristics

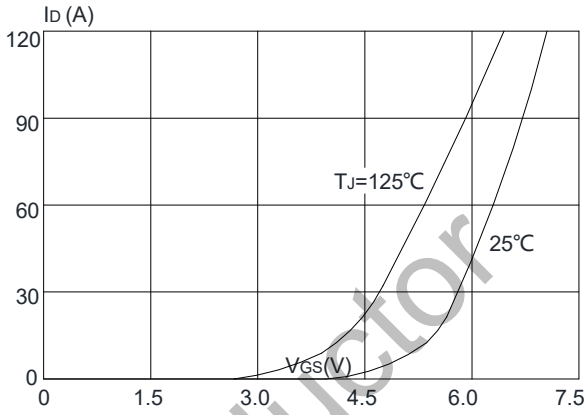

Figure 3: On-resistance vs. Drain Current

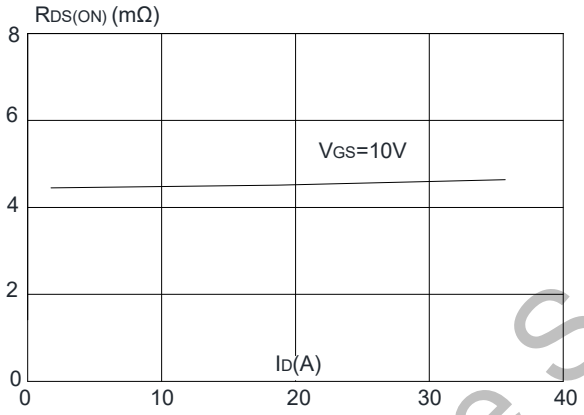

Figure 4: Body Diode Characteristics

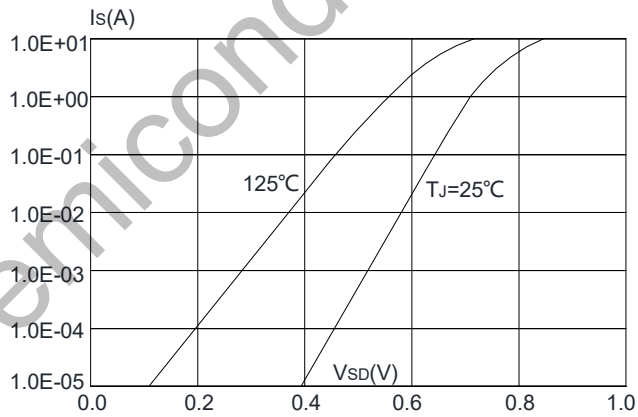

Figure 5: Gate Charge Characteristics

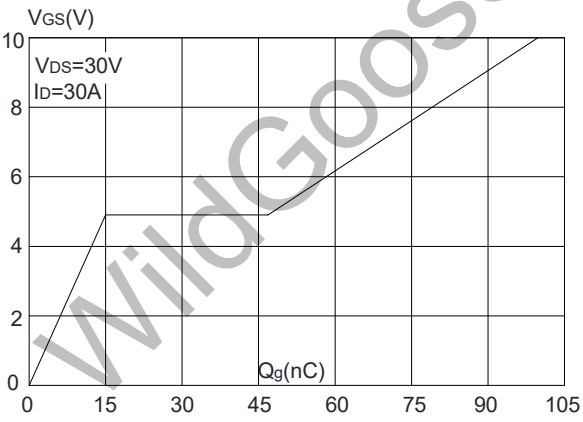

Figure 6: Capacitance Characteristics

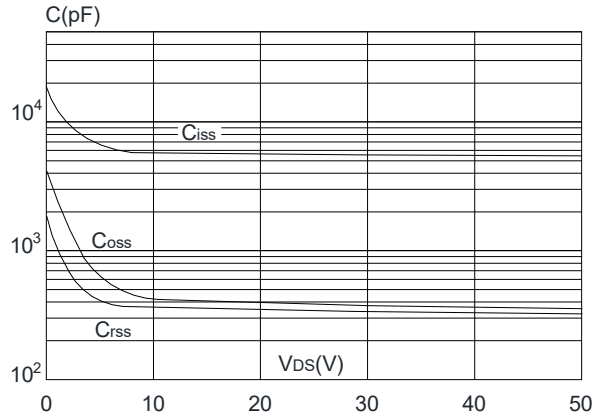

WildGoose Semiconductor

Typical Performance Characteristics

Figure 7: Normalized Breakdown Voltage vs. Junction Temperature

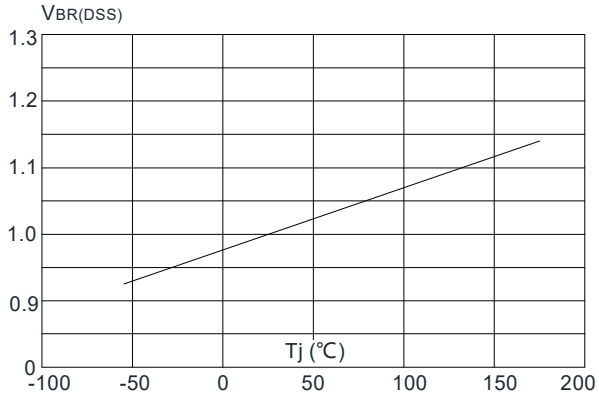

Figure 8: Normalized on Resistance vs. Junction Temperature

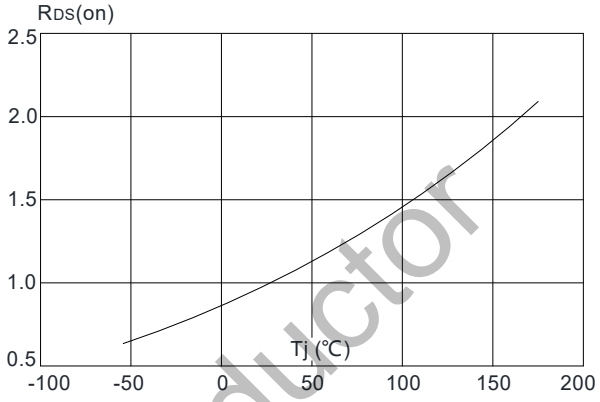

Figure 9: Maximum Safe Operating Area

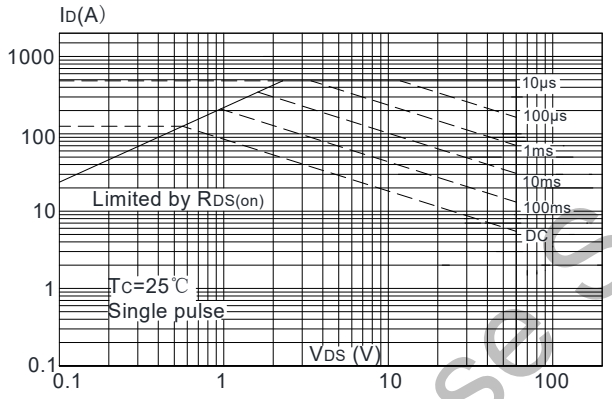

Figure 10: Maximum Continuous Drain Current vs. Case Temperature

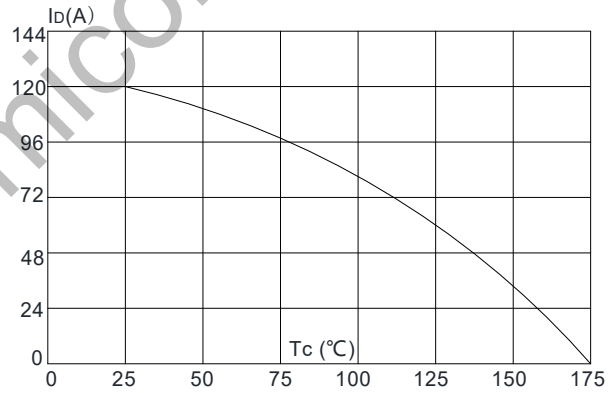

Figure.11: Maximum Effective Transient Thermal Impedance, Junction-to-Case

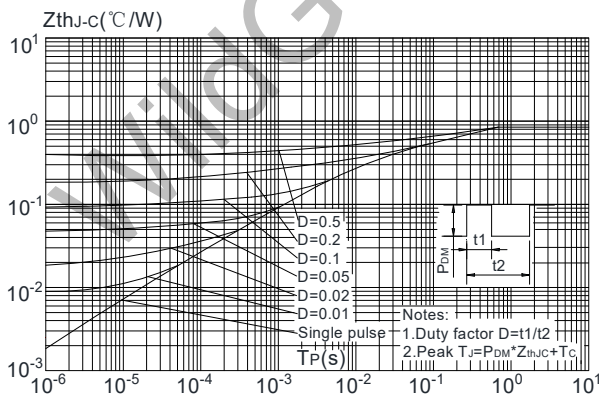

WildGoose Semiconductor

Test Circuit

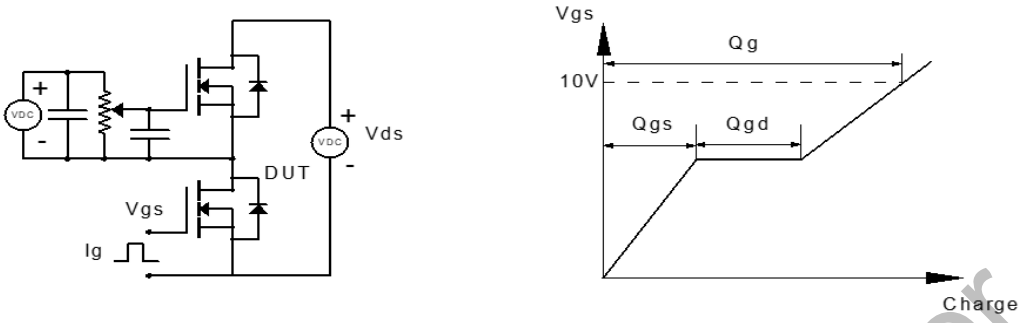

Figure 1: Gate Charge Test Circuit & Waveform

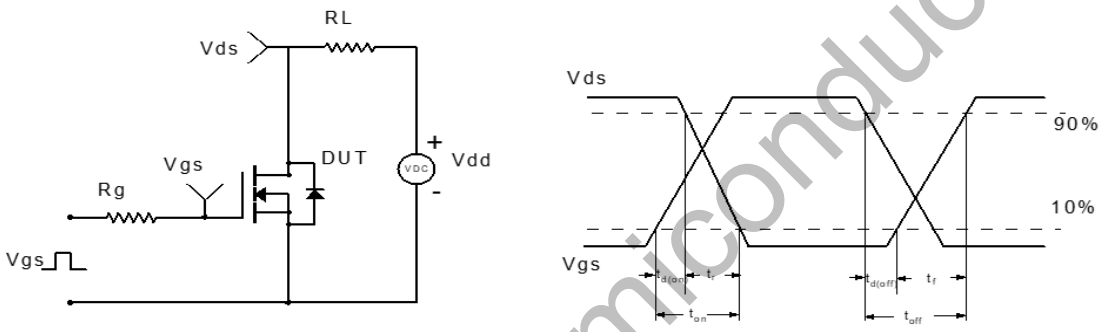

Figure 2: Resistive Switching Test Circuit & Waveform

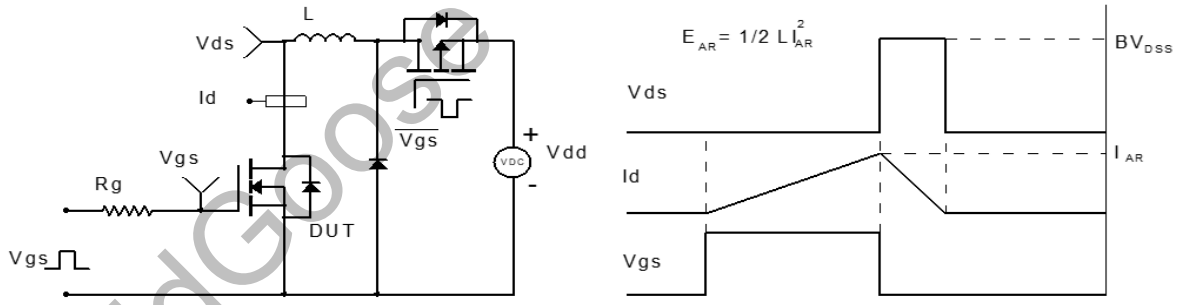

Figure 3: Unclamped Inductive Switching Test Circuit& Waveform

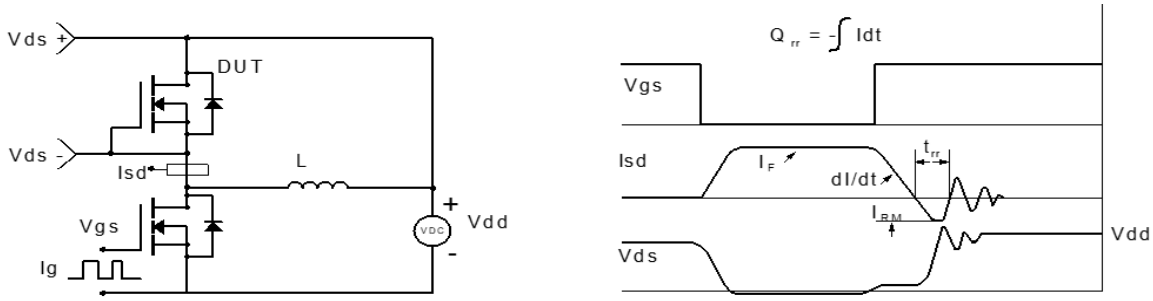

Figure 4: Diode Recovery Test Circuit & Waveform

WildGoose Semiconductor

Package Dimension

TO-252

Unit: mm

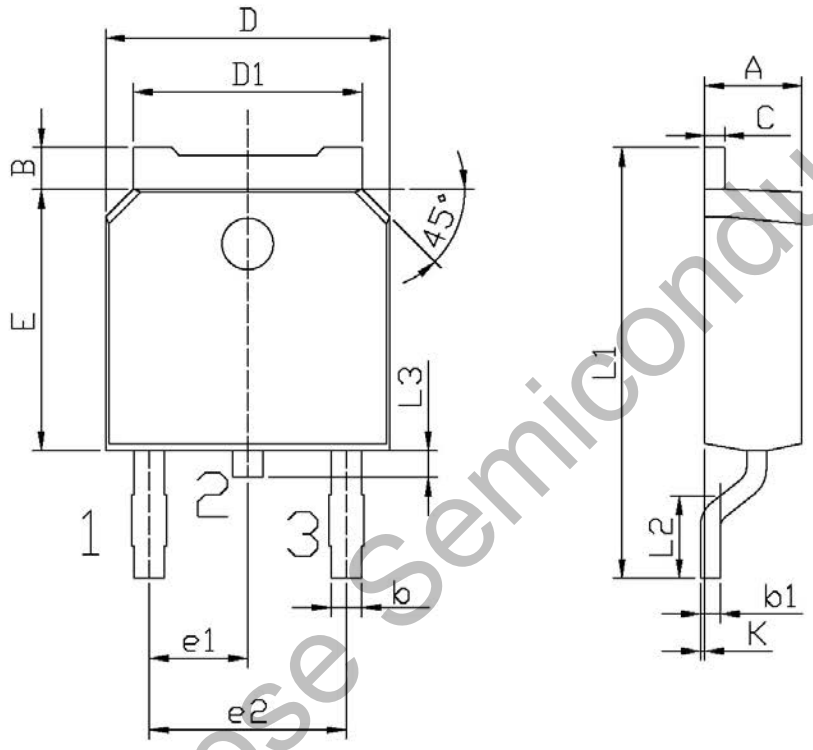

WildGoose Semiconductor

单位：mm

Symbol	Dimensions In Millimeters		Symbol	Dimensions In Millimeters	
	Min	Max		Min	Max
A	2.20	2.40	E	5.95	6.25
B	0.95	1.25	e1	2.24	2.34
b	0.70	0.90	e2	4.43	4.73
b1	0.45	0.55	L1	9.85	10.35
C	0.45	0.55	L2	1.25	1.75
D	6.45	6.75	L3	0.60	0.90
D1	5.20	5.40	K	0.00	0.10