ROHS Compliant

MAPX	MODIFICATION	DATE	DRAW	APPROVE

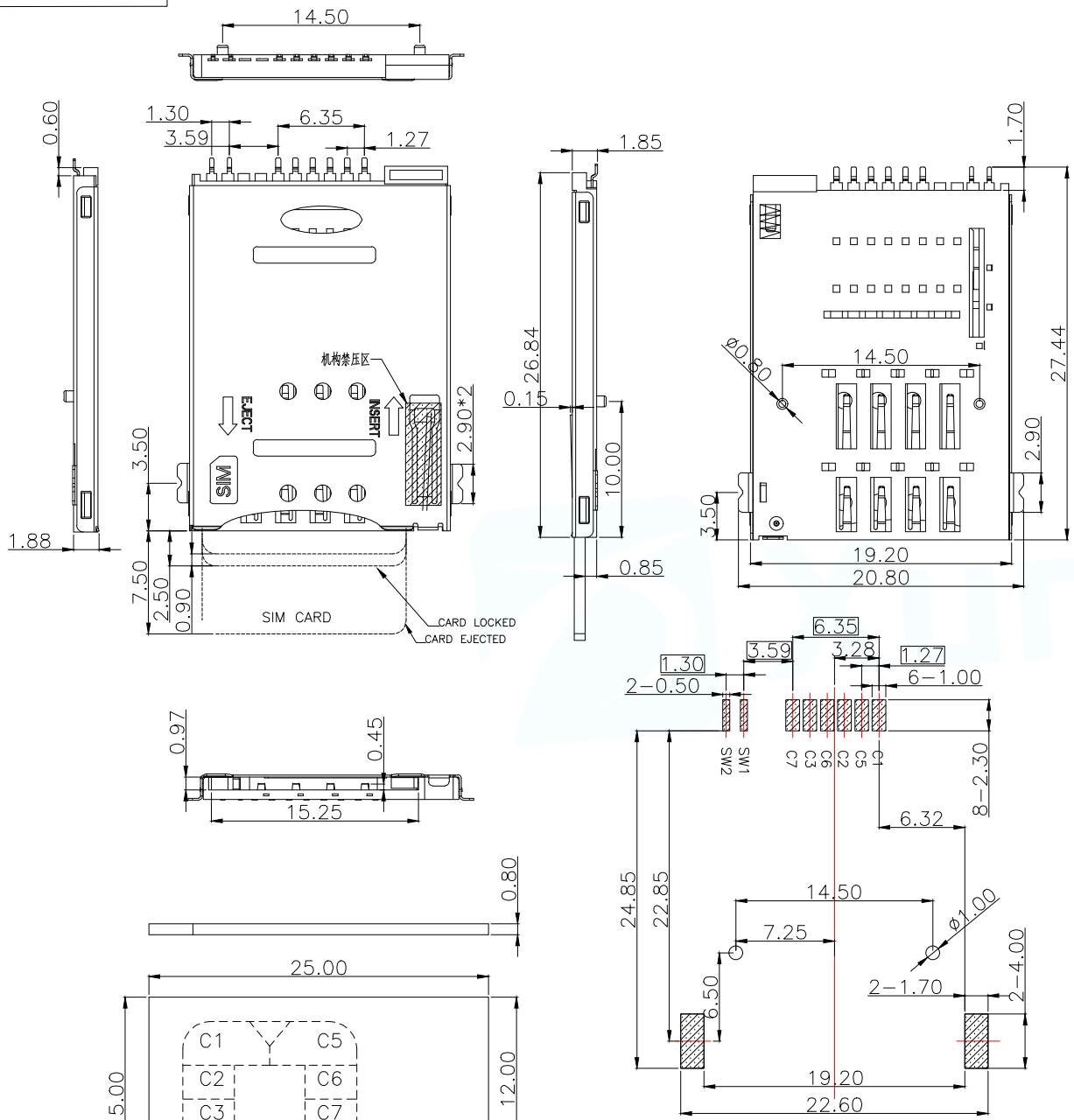

PAD AREA

KEEP OUT AREA

RECOMMENDED PCB LAYOUT

GENERAL TOLERANCE ±0.05

Circuit Diagram for Detect Switch

WITHOUT CARD	OPEN	OPEN SW1 SW2
INSERTING CARD	CLOSE	CLOSE SW1 SW2

SPECIFICATION

MATERIAL:

INSULATOR: HIGH TEMPERATURE THERMOPLASTIC, UL 94V-0.COLOR: BLACK LCP

CONTACT: COPPER ALLOY

PLATING:

CONTACT: PLATED 30U" NI OVERALL PLATED AU SELECTIVE CONTACT AREA

SHELL: PLATED 30U" NI OVERALL,PAD G/F AU

ELECTRICAL:

CURRENT RATING: 0.5AMPS

VOLTAGE RATING: 5V AC/DC

AMBIENT TEMPERATURE RANGE: -20°C~+60°C

STORAGE TEMPERATURE RANGE: -40°C~+80°C

AMBIENT HUMIDITY RANGE: 95% R.H. MAX.

CONTACT RESISTANCE: 100MΩMAX.

INSULATION RESISTANCE: 1000MΩMIN./500VDC

MATING CYCLES: 5,000 INSERTIONS

REFLOW PEAK TEMP: 260°C

MINI SIM CARD	
Pin No.	NAME
C1	VCC OF SIM
C2	RST OF SIM
C3	CLK OF SIM
C5	GND OF SIM
C6	VPP OF SIM
C7	I/O OF SIM
C4/C8	N/A
SW1	DETECTION SWITCH1
SW2	DETECTION SWITCH2

MANUFACTURE DWG		东莞市讯普电子科技有限公司 DongGuan XunPu Electronics Co,Ltd	
UNLESS OTHERWISE SPECIFED TOLERANCES		TITLE:MINI SIM CARD PUSH PUSH 6P+2P SMT带柱	
DECIMALS:	ANGLES:±1°	PAR	SIM-117-ACP8
X.X:±0.25		DWN	
X.XX:±0.10		CHKD	
X.XXX:±0.05		APVD	
CUSTOMER COPY		SCALE1:1 / UNIT:MM	SIZE:A4 / SHEET:1F1 / REV:A

ROHS Compliant

MAPX	MODIFICATION	DATE	DRAW	APPROVE

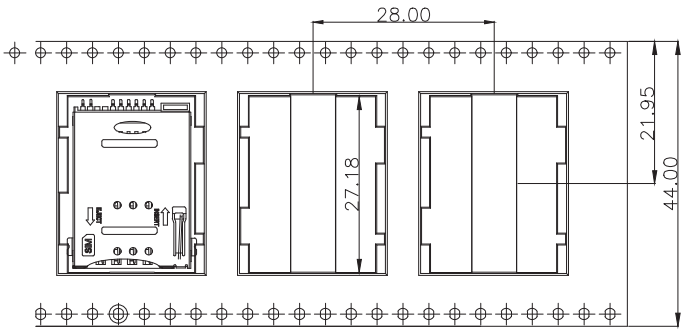

一:

1.将成品一一放入包装盘内,依同一方向放入

2.包装时，如图所示.

3.一个包装然放置700个成品

二:

1.一只纸箱可放置3个或5个包装盘

2.一只纸箱可放2100PCS或4200PCS的成品

3.将成品放入包装盘内包装完后再装箱

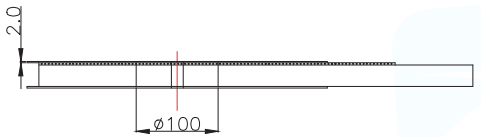

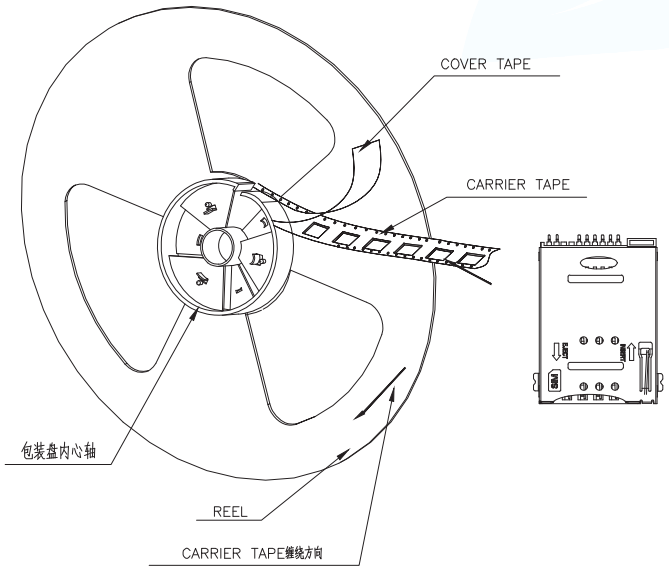

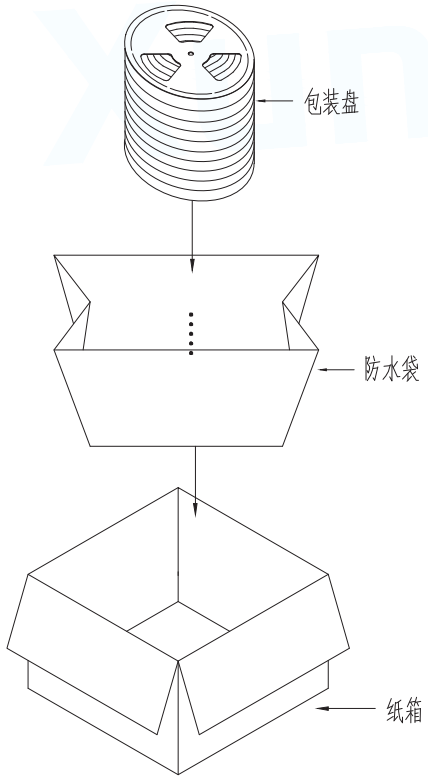

Note: PULL OUT DIRECTION →

1.10 sprocket hole pitch cumulateve tolerance±0.2
2.Carrier camber is within 1 mm in 250mm.
3.Material:Black Conductive Polystyrene Alloy 100
4.All dimensions meet EIA-481-B requirements.
5.Thickness:0.3±0.05mm.
6.Component load per 13"reel:700 pcs.
7. A box of 3 volumes, 2100PCS
8.纸箱规格一: 345*345*165,纸箱重为300g,(一箱装2100PCS)
9.纸箱规格二: 345*345*315,纸箱重为500g,(一箱装4200PCS)
10.重量: 每盘700PCS重1470g,每Pcs重1.3g/Pcs

MANUFACTURE DWG	东莞市讯普电子科技有限公司 DongGuan XunPu Electronics Co,Ltd		
UNLESS OTHERWISE SPECIFED TOLERANCES	TITLE:MINI SIM CARD PUSH PUSH 6P+2P SMT带柱 包装图		
	PAR	SIM-117-ACP8	
DECIMALS: ANGLES:±1°	DWN		
X.X:±0.25	CHKD		
X.XX:±0.10	APVD		
X.XXX:±0.05	SCALE1:1	UNIT:MM	
CUSTOMER COPY	SIZE:A4	SHEET:1F1	REV:A