ROHS Compliant

MAPX	MODIFICATION	DATE	DRAW	APPROVE

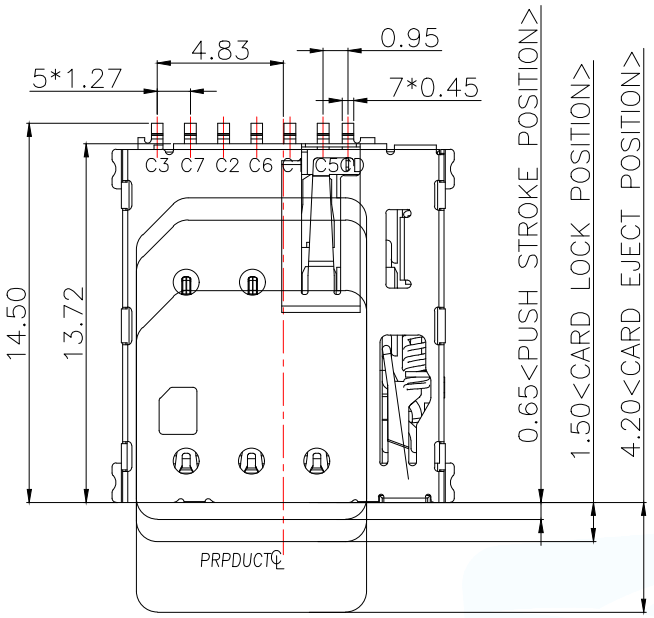

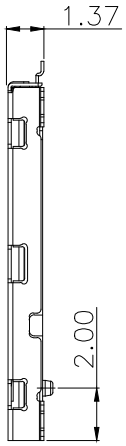

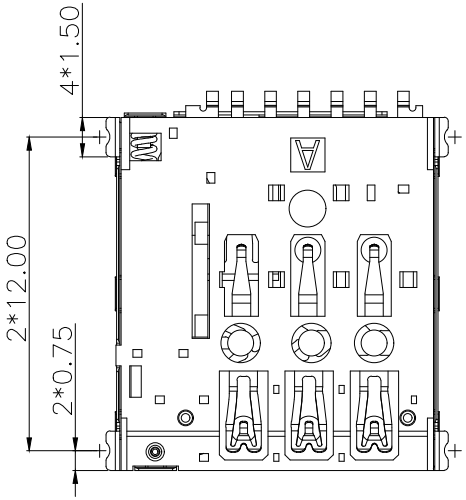

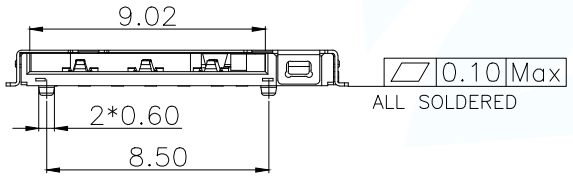

0.10 Max
ALL SOLDERED

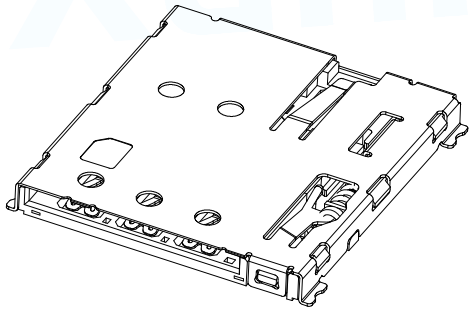

3D VIEW

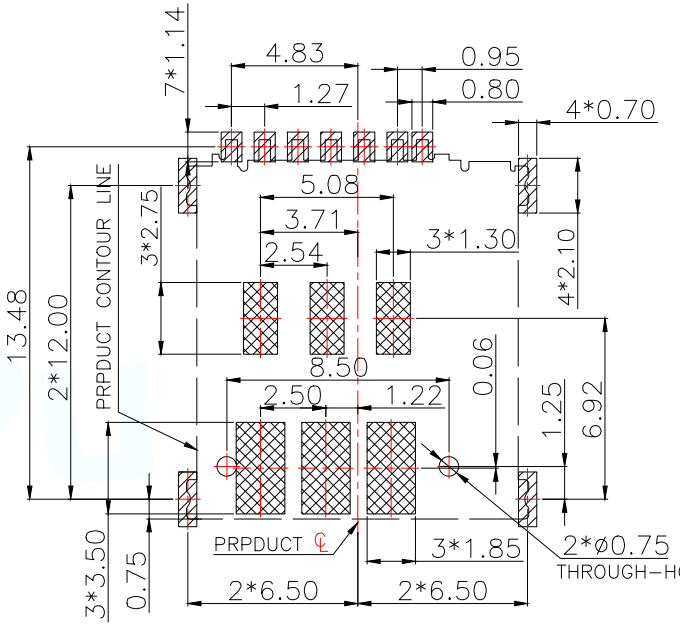

RECOMMENDED PCB LAYOUT TOP VIEW (TOLERANCE:±0.05)
RECOMMENDED MATAL MASK T=0.12mm
SMT SOLDER AREA
NO PATTERN AND VIA HOLE IN HTIS AREA

NOTES:
1.MATERIAL:
HOUSING: High Temperature Thermoplastic
Terminal:Copper Alloy
Shell: Stainless Steel
2.PLATING:
Terminal:30u" Ni UNDERPLATED OVERALL
G/F PLATED ON CONTACT AREA AND SOLDER AREA
Sheel:30u" Ni UNDERPLATED OVERALL
G/F PLATED ON CONTACT AREA AND SOLDER AREA
3.TECHNICAL SPECIALITY:
RATED VOLTAGE: 30V AC MAX.
CURRENT RATING: 0.5A MAX.
INSULATION RESISTANCE:1000MΩ MIN
CONTACT REISTANCE:100mΩ MAX
WITHSTANDING VOLTAGE: 500V AC FOR 1 MINUTES
OPERATING TEMPERATURE: -40℃~+85℃Humidity 80% R.H MAX

CRICUIT DIAGRAM FOR CARD DETECT SWITCH

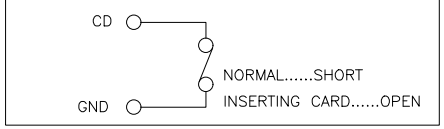

PIN/NO	ASSIGNMENT
C1	VCC
C2	RST
C3	CLK
CD	Detect Switch
C5	GND
C6	VPP
C7	I/O

MANUFACTURE DWG

UNLESS OTHERWISE SPECIFED TOLERANCES

DECIMALS:	ANGLES:
.X:±0.30	X.°:±3°
.XX:±0.20	X.X°:±2°
.XXX:±0.10	

东莞市讯普电子科技有限公司
DongGuan XunPu Electronics Co,Ltd

TITLE:1.37H NANO SIM CARD CONNECTOR(L型) 有定位柱

PAR	SMN-303-ACP7	
DWN	Lucas	
CHKD	Ethan	
APVD	Jacob	
SCALE1:1	UNIT:MM	
CUSTOMER COPY	SIZE:A4	SHEET:1F1 REV:A

ROHS Compliant

MAPX	MODIFICATION	DATE	DRAW	APPROVE

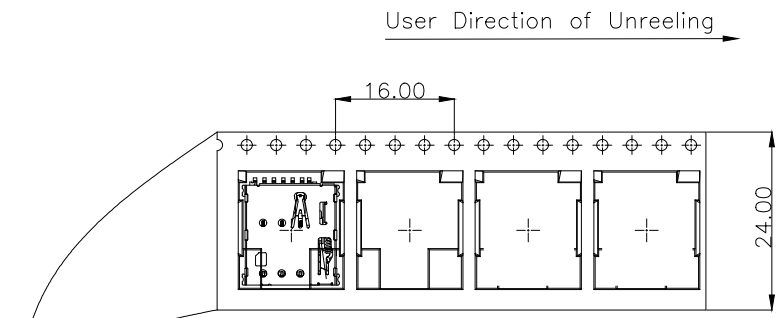

NOTES

1. NUMBER OF CONNECTORS:1500PCS/REEL
2. LEAD TAPE LENGTH

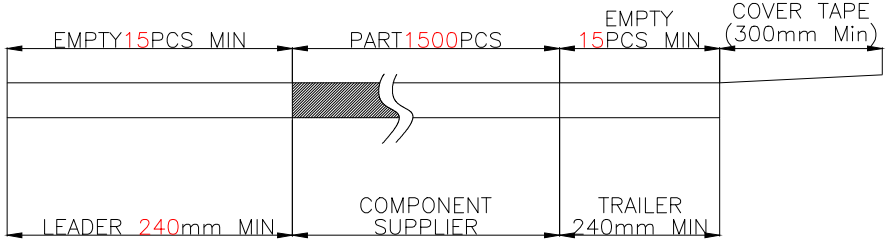

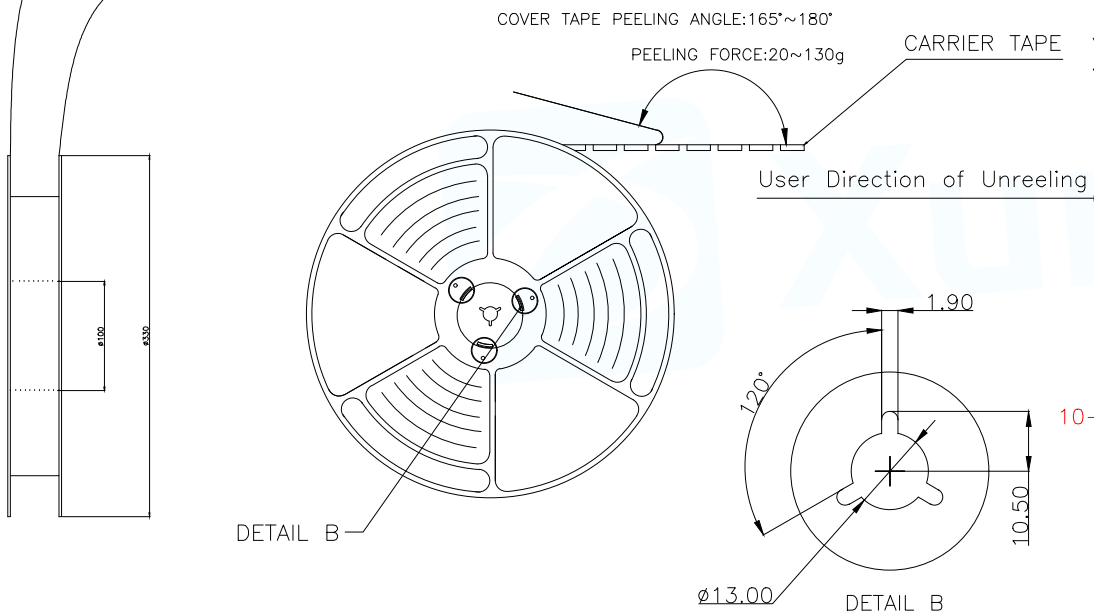

3.QUANTITY:15000PCS/CARTON

4. WEIGHT :

3.1 NET WEIGHT : Kg

3.2 GROSS WEIGHT : Kg

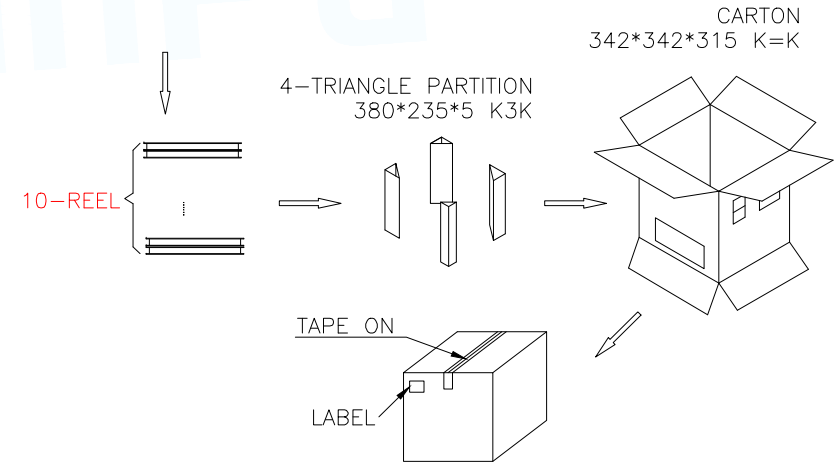

MANUFACTURE DWG	东莞市讯普电子科技有限公司 DongGuan XunPu Electronics Co,Ltd		
UNLESS OTHERWISE SPECIFED TOLERANCES		TITLE:1.37H NANO SIM CARD CONNECTOR(L型) 有定位柱	
DECIMALS: / ANGLES:		PAR	SMN-303-ACP7
.X:±0.20 / X.°:±2°		DWN	Lucas
.XX:±0.10 / X.X°:±1°		CHKD	Ethan
.XXX:±0.05	CUSTOMER COPY	APVD	Jacob
		SCALE1:1 / UNIT:MM	
		SIZE:A4	SHEET:1F1 / REV:A