ROHS Compliant

MAPX	MODIFICATION	DATE	DRAW	APPROVE

Specification

MATERIAL:

Insulator: High Temperature Thermoplastic,
(塑胶 黑色_CP,耐火等级UL 94V-0)
Contact: Copper Alloy
Shell: SUS304

PLATING:

Contact: Plated 50u" Ni Overall
Plated Au Selective Contact Area
Plated 100u" Sn Over Ni On Solder Area
(接触端子电镀: 全部镀底50U,接触区域1U金,焊脚处需50U/最少)

Shell: Plated 50u" Ni Overall
Plated 1u"Au Selective Contact Area
(外壳电镀:镀底50U,焊接处1U金)

Electrical:

Current Rating :0.5Amps max(额定电流:0.5A最大)
Voltage Rating :5V AC/DC(额定电压:5V AC/DC)
Ambient Temperature Range :-40°C~+85°C(工作温度:-20度到+60度)
Storage Temperature Range :-40°C~+85°C(工作环境:-40度到+80度)
Ambient Humidity Range :95% R.H. Max.(上锡效果:95%以上)
Contact Resistance:100mΩ max.(端子接触电阻:100mΩ最大)
Insulation Resistance:1000MΩ min./500VDC(绝缘阻抗:100兆欧最小)
Mating Cycles:5,000 Insertions(寿命:5000次)
产品耐温温度:260°C

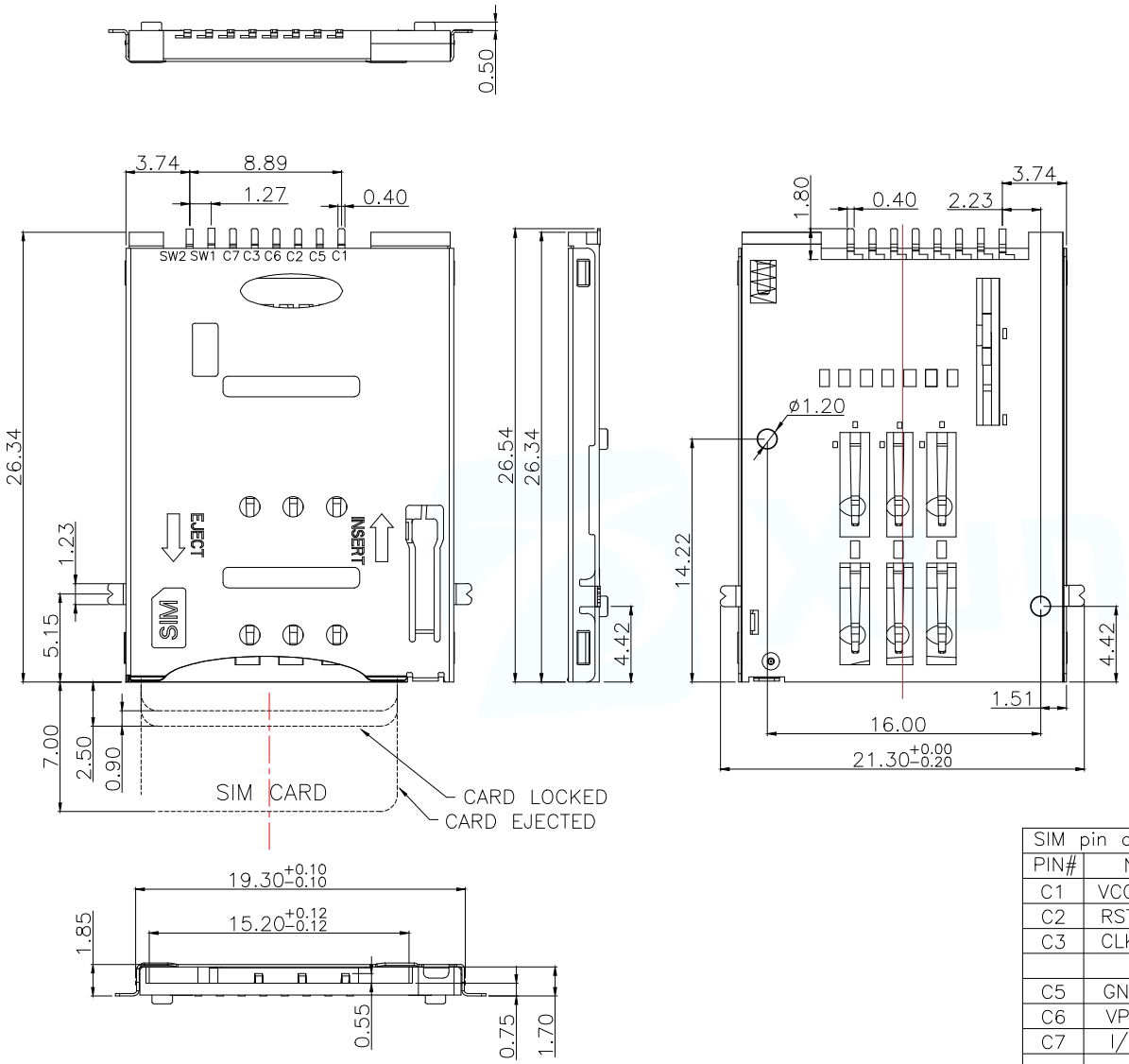

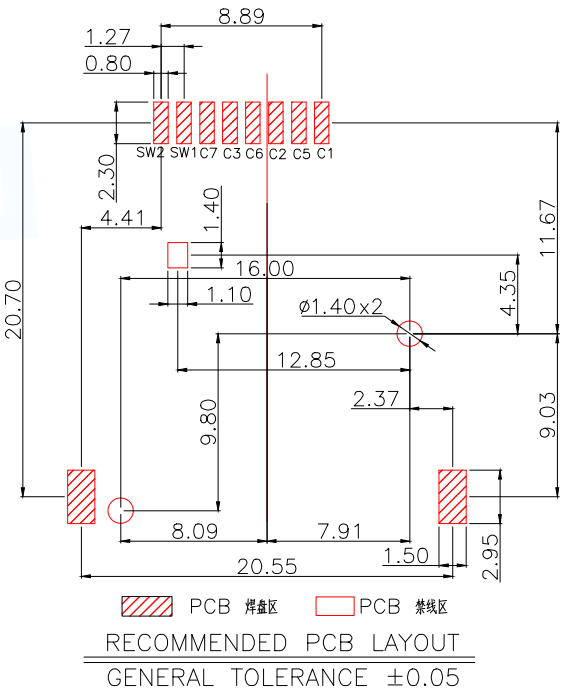

RECOMMENDED PCB LAYOUT

GENERAL TOLERANCE ±0.05

SIM pin assignment	
PIN#	Name
C1	VCC 电压
C2	RST 重置
C3	CLK 时钟
C5	GND 接地
C6	VPP 电压
C7	I/O 输入输出



WITHOUT SIM CARD



SIM CARD INSERTED

MANUFACTURE DWG

东莞市讯普电子科技有限公司
DongGuan XunPu Electronics Co,Ltd

UNLESS OTHERWISE SPECIFED TOLERANCES

DECIMALS:	ANGLES:
X.X:±0.25	
X.XX:±0.20	
X.XXX:±0.10	

TITLE:MINI SIM CARD PUSH PUSH 6P+2P有柱

PAR	SIM-110-ACP8	
DWN	Lucas	
CHKD	Ethan	
APVD	Jacob	
SCALE1:1	UNIT:MM	
CUSTOMER COPY	SIZE:A4	SHEET:1F1 REV:A

ROHS Compliant

MAPX	MODIFICATION	DATE	DRAW	APPROVE

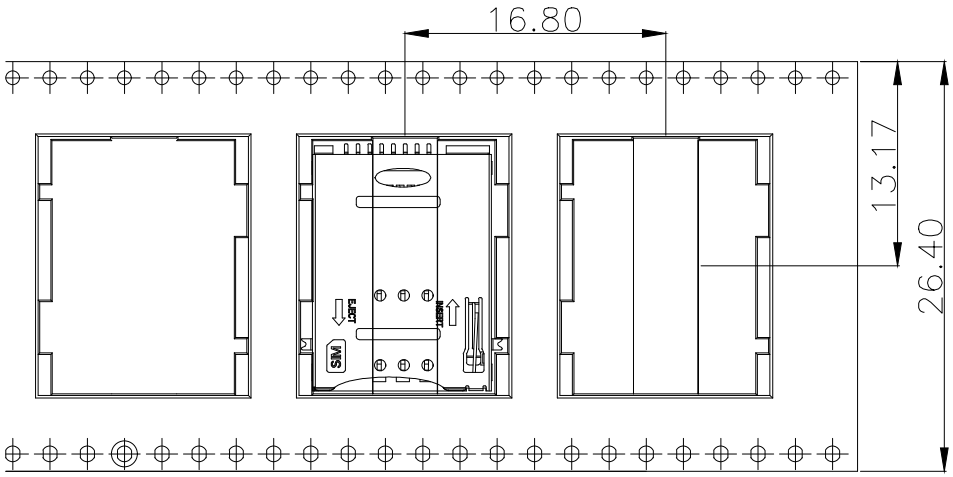

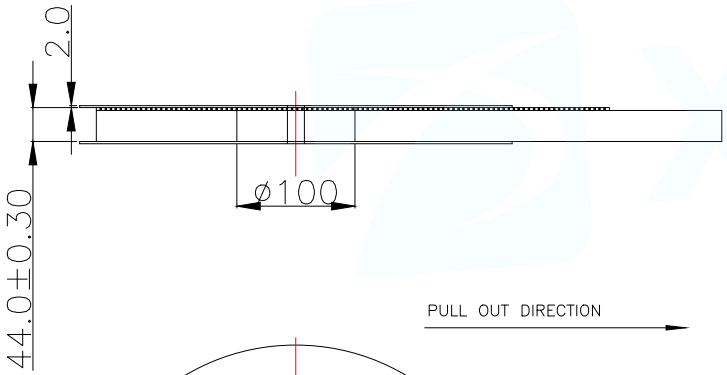

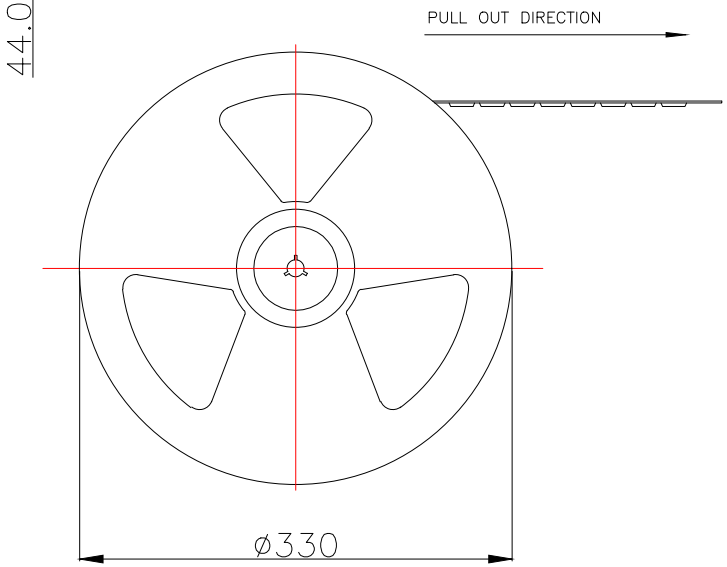

PULL OUT DIRECTION

NOTE:

1.10 SPROCKET HOLE PITCH CUMULATEVE TOLERANCE±0.2

2.CARRIER CAMBER IS WITHIN 1 MM IN 250MM.

3.MATERIAL:BLACK CONDUCTIVE POLYSTYRENE ALLOY 100% RECYCLABLE.

4.ALL DIMENSIONS MEET EIA-481-B REQUIREMENTS.

5.THICKNESS:0.3±0.05MM.

6.COMPONENT LOAD PER 13"REEL:700 PCS.

7.A BOX OF 3 VOLUMES, 2100PCS

8.纸箱规格：345*345*315,纸箱重为300G

9.重量：每盘700PCS重1500G,每PCS重1.3G/PCS

MANUFACTURE DWG	东莞市讯普电子科技有限公司 DongGuan XunPu Electronics Co,Ltd		
UNLESS OTHERWISE SPECIFED TOLERANCES		TITLE:MINI SIM CARD PUSH PUSH 6P+2P有柱 包装图	
		PAR	SIM-110-ACP8
DECIMALS:	ANGLES:±1°	DWN	
X.X:±0.25		CHKD	
X.XX:±0.20		APVD	
X.XXX:±0.10	CUSTOMER COPY	SCALE1:1	UNIT:MM
		SIZE:A4	SHEET:1F1
			REV:A