REVISION			
LTR	DESCRIPTION	DATE	APP
A0	NEW RELEASE	05/20/2020	PECK

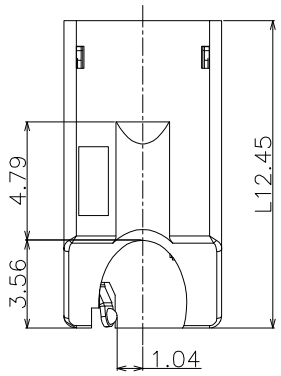

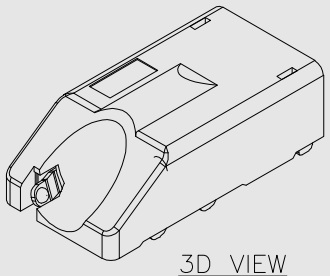

邀您使用(微信)小程序
硕方电子开关&连接器选型手册
手机扫码即可进入...

P.C.B LAYOUT

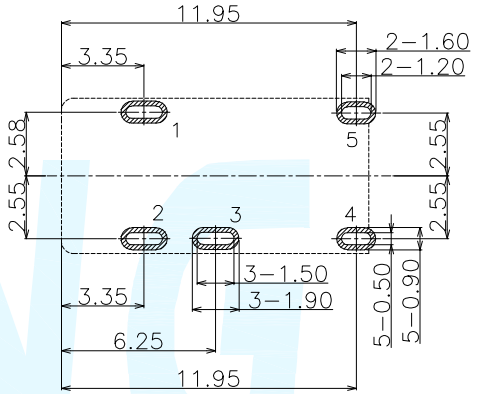

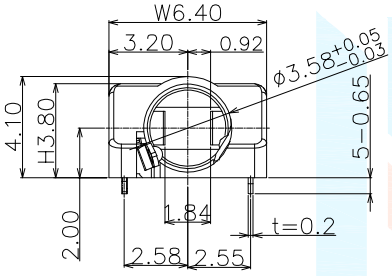

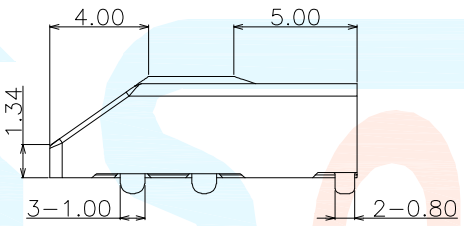

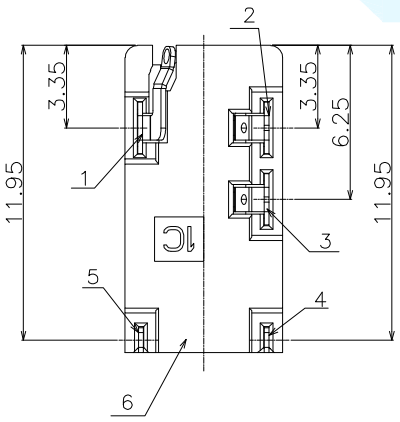

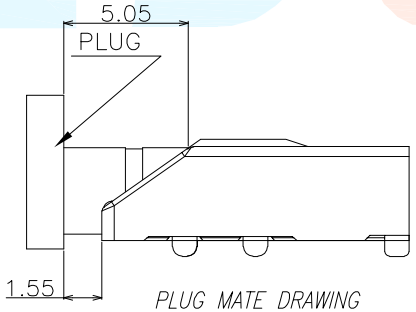

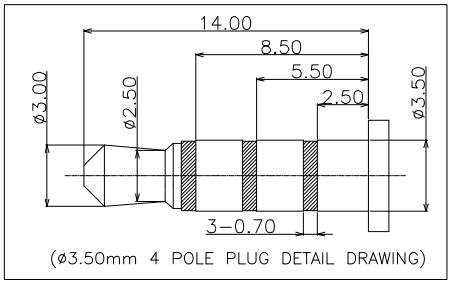

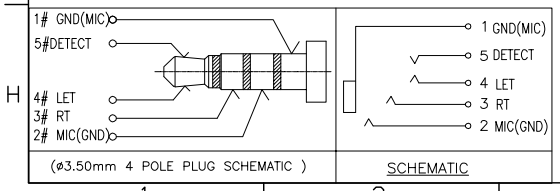



Material declaration		
No	NAME	MATERIAL
①	TERMINAL 1#	COPPER ALLOY; NICKEL UNDER PLATING OVERALL, GOLD PLATING ON SOLDER AREA; GOLD PLATING ON CONTACT AREA
②	TERMINAL 2#	
③	TERMINAL 3#	
④	TERMINAL 4#	STAINLESS STEEL; NICKEL UNDER PLATING OVERALL, GOLD PLATING ON SOLDER AREA; GOLD PLATING ON CONTACT AREA
⑤	TERMINAL 5#	
⑥	HOUSING	HIGHT TEMPERATURE PLASTIC; COLOR BLACK

DIMENSION CLASSIFICATION
■ : CRITICAL
☒ : MAJOR

TOLERANCE TABLE

.X	±	0.40
.XX	±	0.25
.XXX	±	0.10
ANGLE	±	2°

台灣碩方精密電子科技有限公司
TAIWAN SOFNG PRECISION ELECTRONIC CO., LTD

TITLE	PJ-369B 板上卧插式斜口四段式3.5耳机插座			SOFNG 開關,連接器		
PART NO.	SOF-G006			SERIES	SD106	
APPROVED	Peck	DWG NO.	SOF-G006			
CHECKED	Paul	SCALE	1:1	UNIT	mm	SIZE A4
DRAWIN	David			REV	A0	SHEET NO. 1/1