CHEVRON ELECTRONIC
诚潤電子

东莞市诚润电子科技有限公司
Chevron Electronic Technology Co Ltd
广东省东莞市厚街镇宝宏路鼎昊高新科技产业园 D 栋二楼
2nd Floor of Building D, Baohong Road Dinghao High-New Technology Industrial Park, Houjie Dongguan, Guangdong
Tel: +86 769-85888841 E-mail:ccre@chevronfuse.com
Web:www.chevronfuse.com

承 认 书

Specification For Approval

产品信息 Product information

产 品 名 称Product name： φ3.6*10 陶瓷管慢断保险丝/ φ3.6*10 Ceramic tube Time late fuse

产 品 规 格Product model： 3CT xxA250V

拟 制 Prepared By	确 认 Reviewed By	批 准 Approved By
雷淑贤	邓 波	方 剑

客户承认 Customer Approval

客户名称 Customer name:

客户料号 Customer P/N:

经 办 Prepared By	审 核 Reviewed By	批 准 Approved By

确认结果 Verify the results：

☐合格 Qualified	☐不合格 Unqualified	不合格原因 Root cause:

生效日期 Effective Date: 年 YY 月 MM 日 DD

1.如果本承认书获得贵司认可，请您签名后拷贝一份回传给我们。
If this acknowledgement letter is approved by your company, please sign it and send us a copy
2.当您下订单给诚润电子时，烦请在订单中列出上面产品信息表格中的产品名称和产品规格。
When you place an order with Chengrun Electronics, please kindly list the product names and specifications in the product information table above in the order form

变更履历

内　容	日　期	确 认
修改封面；增加履历页；修改内容；增加信赖性测试；完善产品特性项，	2025. 5. 7	方 剑
添加实物图片	2026.3.14	方 剑
9.C 增加存储条件；9.D.1 修改波峰焊条件	2026.7.1	方 剑
明确电阻范围±20%	2026.8.19	方 剑

编　制	确　认	批　准
李尚品	邓　波	方　剑

1.适用范围 / Scope of Application

本产品适用于各类电子设备电路的过流保护，广泛应用于照明设备、电源设备以及适配器等领域。

This product is suitable for various kinds of electronic devices' circuit over current protection. Widely used in industrial of Lighting, Power supply and Adapter applications, etc

2.适用测试标准/ Standards

遵循 IEC60127-3;GB/T9364-3; UL248-14

In accordance with IEC60127-3;GB/T9364-3; UL248-14

3.单体和编带结构及尺寸 / Structure and dimensions of individual units and tape carriers

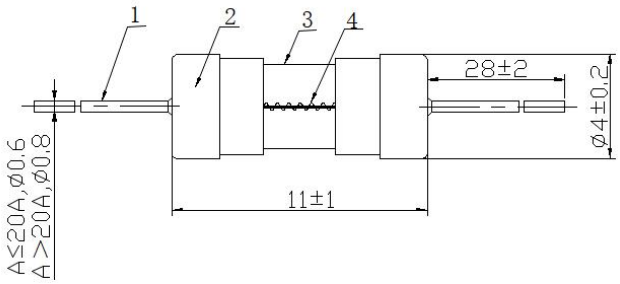

编号 No	名称 Name	材质 Material
1	引线 Lead	铜镀锡 Sn Plated Cu
2	铜帽 cap	铜镀镍 Ni Plated Cu
3	陶瓷管 Ceramic tube	陶瓷 Ceramic
4	熔体 Element	合金线 Alloy



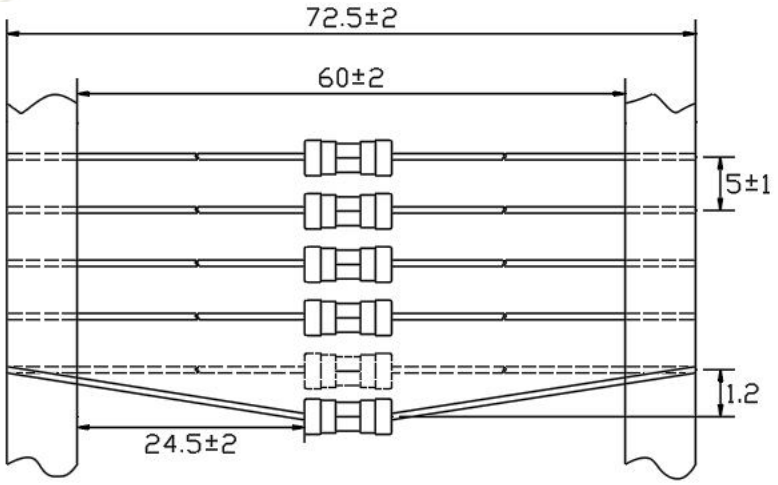

4.认证清单/ Certification List

安规标准 Agency	认证电压 Certified voltage	认证电流 Ampere Range	证书编号 Agency File Number
UR-CUR	125V/250V 300V/350Vac	50mA/62mA/80mA/100mA/125mA/160mA/200mA/250mA/315mA/400mA/500mA/630mA/750mA/800mA/1.0A/1.25A/1.6A/2.0A/2.5A/3.15A/4.0A/5.0A/6.3A/7.0A/8.0A/10.0A/12A/12.5A/15A/16A/20A	E358589
VDE	250Vac	1A/1.6A/2A/3.15A/5A/6.3A	40054632
CCC 自我声明		1A/1.6A/2A/3.15A/5A/6.3A	2021980301007766
CQC		1A/1.6A/2A/3.15A/5A/6.3A	CQC21107313250
KC		1A/1.6A/2A/3.15A/5A/6.3A	SU05044-21001/21002

5.产品标示 / Product Markin

保险丝外壳顶部需有下列标示：The top of the fuse cap shall have the following markings

以 1.6A 举例：Example 1.6A

A 帽、Cap A	B 帽，Cap B
	3CT T1.6A250V

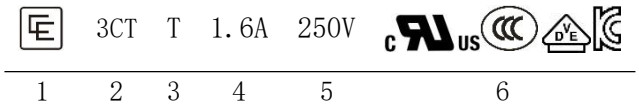

1	工厂徽标：Chevron Logo:	
2	产品名称：Product Name	3CT
3	特性符号：Characteristic symbol	T
4	额定电流：Rated Current	1.6A
5	额定电压：Rated Voltage	250V
6	安规符号：Approval Marks	See the Product Characteristic

注意：A.对于标示的大小和位置没有规定 Size and position of the markings shall not be provided；

B. 其它电流对应安规符号请参考产品特性中 Marking 栏 For other current values, please refer to the

"Marking" column in the product characteristics for the corresponding safety marking symbols

6.产品外观和形状要求/ Appearance and shape requirements

A. 外观不应出现显著的污点、裂纹，标识应该容易辨识

There shall not be any remarkable stain and crack on the appearances, markings shall be easily legible

B. 插件式陶瓷管保险丝

Plug-in type ceramic tube fuse

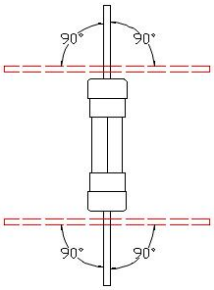

C. 引脚拉力强度 / Lead Pull Strength

10 牛顿 10±1 秒 / 10N for 10±1 Seconds

D. 引脚弯曲测试/引线必须能够承受弯曲 90° 一次

, Pin bend test、Bend 90 degrees once

7.产品特性/Product Characteristic

Part No	Rated Current	Rated Voltage	Typic Cold DCR(mΩ ± 20%)	Breaking Capacity	I^2T A^2s	Safety Approvals
3CT02500250	250mA	250Vac	-	UL 100A@250V VDE 35A or 10In@250V	-	cULus
3CT03150250	315mA	250Vac	458		0.09	cULus
3CT04000250	400mA	250Vac	-		-	cULus
3CT05000250	500mA	250Vac	-		-	cULus
3CT06300250	630mA	250Vac	165		1.00	cULus
3CT07500250	750mA	250Vac	-		-	cULus
3CT08000250	800mA	250Vac	103		2.56	cULus
3CT11000250	1.0A	250Vac	85.5		4.50	cULus CCC VDE KC
3CT11250250	1.25A	250Vac	63.2		8.20	cULus

3CT11600250	1.6A	250Vac	-		-	
3CT12000250	2.0A	250Vac	35		25.60	
3CT12500250	2.5A	250Vac	24		26.50	
3CT13150250	3.15A	250Vac	20		49.61	
3CT14000250	4.0A	250Vac	14		176	
3CT15000250	5.0A	250Vac	11		225	
3CT16300250	6.3A	250Vac	8.7		262	
3CT18000250	8.0A	250Vac	-		-	
3CT21000250	10.0A	250Vac	-		-	

8.特性测试/ characteristic test

测试条件/Test Condition

A. 所有的测试环境温度保持在 25±10°的范围内

All the test environments are maintained within the temperature range of 25 ± 10 °C

B. IT 特性测试参考下表/IT Characteristic test follow up the form

额定电流 Rated current	熔断时间 Opening Time					
	100%	150%	210%	275%	400%	1000%
250mA-5A	-	>1HS	<30min	10ms-3s	3ms-300ms	T<20ms
6.3A-10A	-	>1HS	<30min	50ms-10s	5ms-400ms	T<20ms
12A-20A	>4hrs	-	<5min	-	-	-

C．时间电流曲线参考图/IT time current curve

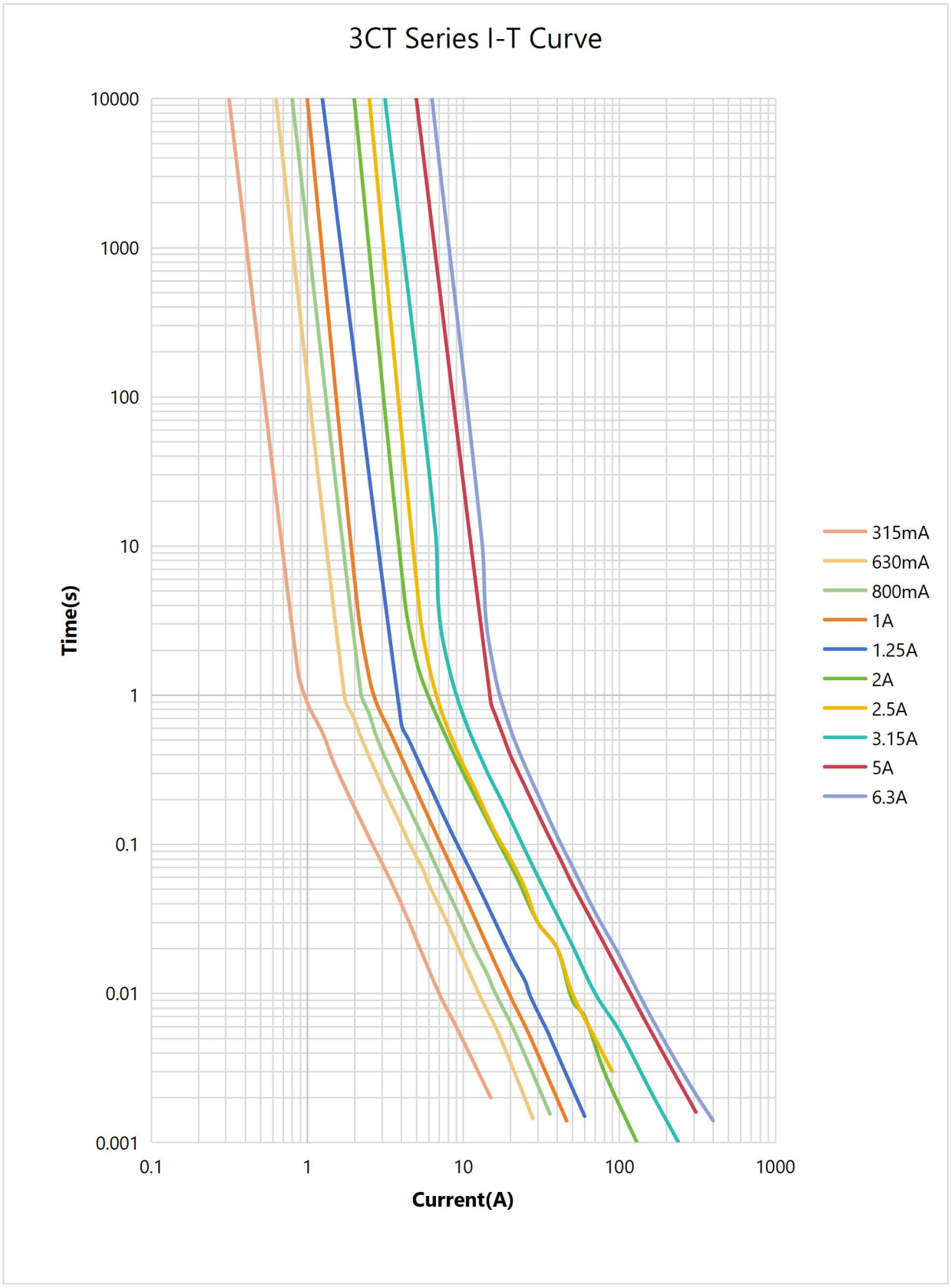

9.环境特性/ Environmental Characteristic

A. 正常操作温度范围-55℃～+125℃

Operarting temperature -55℃～+125℃ nomal

Temperature Rerating Curve

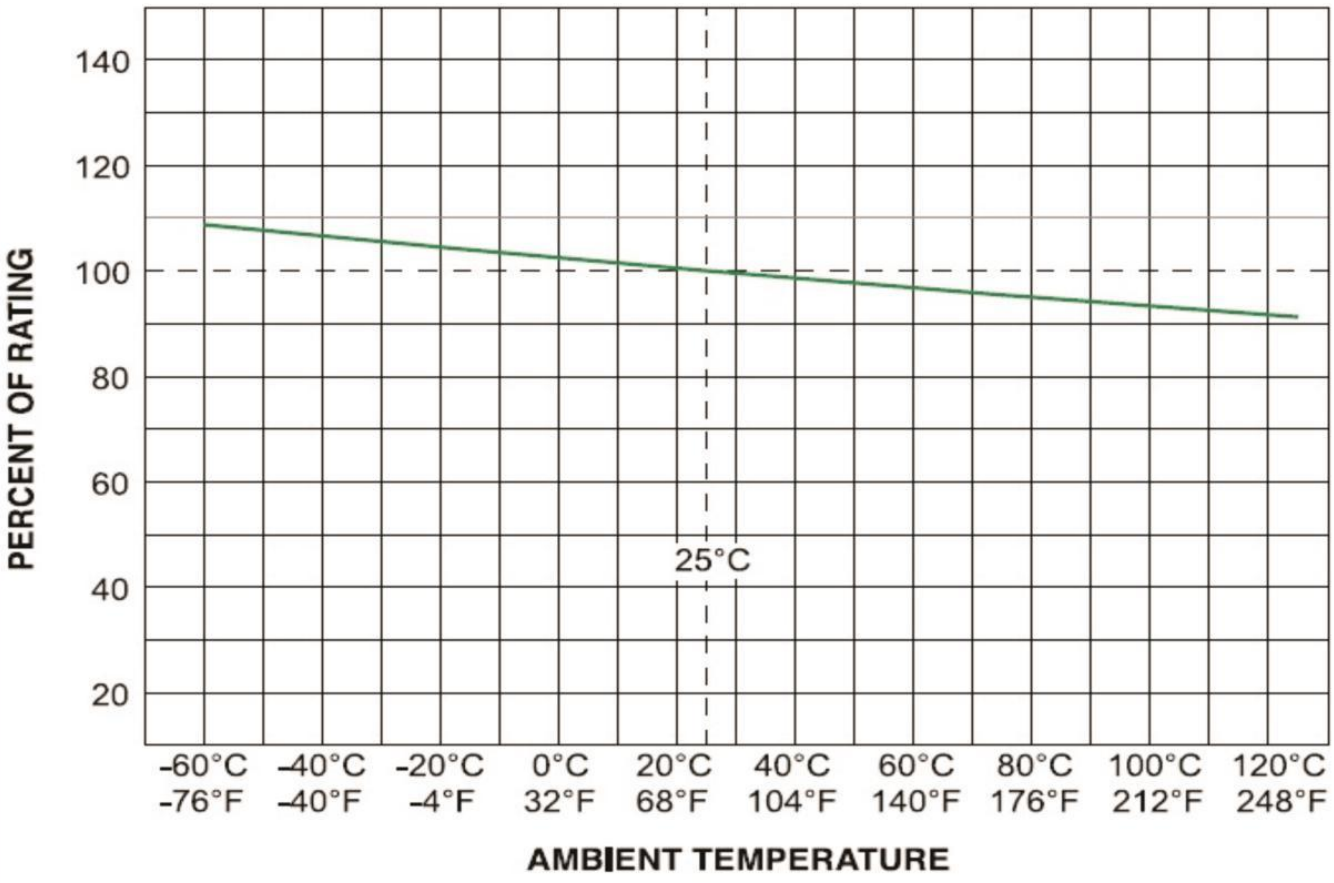

B. 若工程师在设计保险丝安装的环境温度超出 25℃时，需要考虑环境温度对保险丝的寿命影响，请参考下面：温度-电流曲线图

If the engineer finds that the ambient temperature where the fuse is installed exceeds 25℃, he/she needs to consider the influence of ambient temperature on the lifespan of the fuse. Please refer to the following:Temperature - Current Curve Chart

C．存储条件 / Storage Conditions

在温度+5℃~30℃、相对湿度 25%～60%的密闭条件下可存放 2 年。

Under airtight in temperature+5℃~ 30℃、relative humidity 25%～60% can store 2 years.

在温度+10℃~60℃、相对湿度为 95%的非露天下最多可存放 30 天。

Without dew in temperature+10℃~ 60℃、relative humidity be 95% maximum value for 30days.

D. 建议客户焊接参数

1. 波峰焊参数 / Wave Parameters:

锡炉温度及焊接时间 / Solder Pot Temperature: 265℃ ±5℃; Solder Dwell Time: 5~6s

2．手工焊参数 / Hand-Solder Parameters:

烙铁温度及焊接时间 / Solder Iron Temperature: 370±10℃; Heating Time: 3s Max

E．信赖性测试/Reliability test

编号 No	项目 Item	内容 content
1	绝缘阻抗测试 Insulation Resistance test	100000Ω Minimal
2	可焊性测试 Solderability test	240±5℃; T=3±0.5s; Cover≧95%
3	耐焊接热测试 Soldering heat resistance test	260℃ 10s; IΔRI<10%
4	热冲击测试 Thermer shock	100 ctcles between -65℃~+125℃ 60minite; each extreme IΔRI<10%
5	高低温储存 High-low temperature storege	+125℃/-55℃ each 96 hrs; IΔRI<10%
6	高温操作 High temperature operating life	70±2℃; 0.6In;96hrs; IΔRI<10%
7	盐雾测试 Salt spray test	5% salt solution; 48hrs; IΔRI<10%
8	耐温性测试 Humidity test	T=40±2℃,90%-95%RH;1000hrs, IΔRI<10%

F. 安装建议 Installation Recommendations

建议按如下示意图安装 It is recommended to install as shown in the following diagram

立式成型 Vertical forming	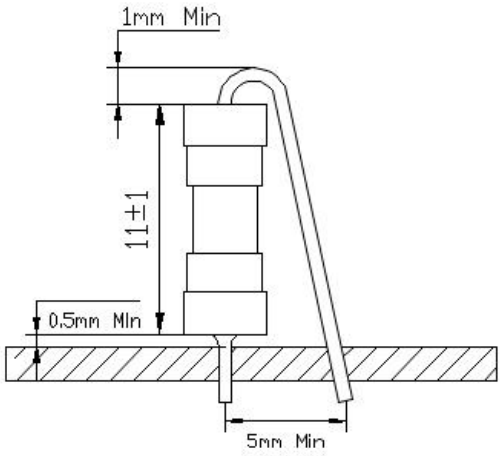
卧式成型 Horizontal forming	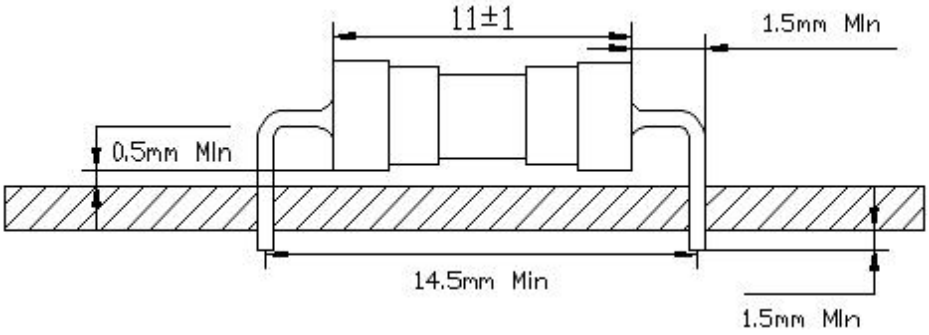

10.包装 / Packaging

1. 包装袋/盒上标签需明确产品料号，产品电压/电流及安规符号等信息；

The labels on the packaging bags/boxes should clearly indicate the product part number, product voltage/current and safety symbols, etc

2. 包装材料均符合 ROHS/REACH/HF 的环保要求， 且包装材料不会和零件发生化学反应，造成不良；

The packing material conforms to ROHS/REACH/HF environmental protection request. And the packing materials will not have the chemical reaction with the components

3. 散装产品和编带产品信息/ Bulk and type reel informatiion

包装选项 Packaging Option	胶袋数量(pcs) Plastic bag Quantity	内盒数量(pcs) Inner box Quantity	外箱数量(pcs) Outer box Quantity	内部磁间距(mm) Inside Tape Spacing
散装(带引线) Bulk(with pigtail type)	500	2500	25000	N/A
编带 Tape	N/A	2000	16000	5mm Pitch and 60mm

4．其它定制可协商/ Other customization can be negotiated

5．包装盒尺寸图/ Packaging Box Dimension Diagram

散装产品内盒尺寸↓ Dimensions of the inner box for bulk products	散装产品外箱尺寸↓ Dimensions of the outer carton for bulk products
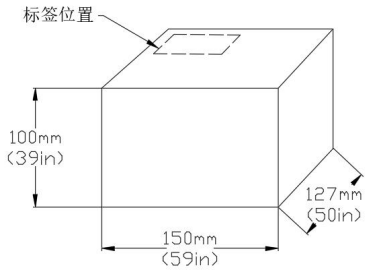	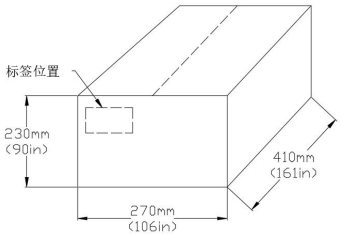
编带产品内盒尺寸↓ Dimensions of the inner box for ribbon products	编带产品外箱尺寸↓ Dimensions of the outer box for tape products
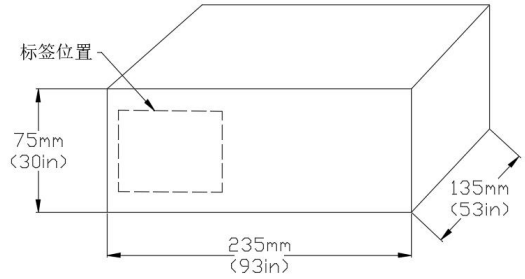	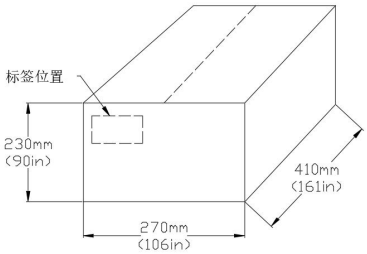

11.其它/Other

1. 如果在使用中超出本规格书要求，须经双方协商确认；

   If the requirements exceed those stipulated in this specification during the usage, it shall be confirmed through consultation between both parties.

2. 如果本规格书有不适当的地方，须经过双方协商由本公司修改；

   If there is anything inappropriate in this specification, it shall be revised by our company after mutual consultation between both parties