ITEM	NAME	Q'TY	DESCRIPTION
5	HOUSING	1	HIGH TEMP PLASTIC,COLOR BLACK
4	TERMINAL 4	1	PHOSPHOR BRONZE; NICKEL UNDER PLATING OVERALL,GOLD PLATING ON SOLDER AREA;GOLD PLATING ON CONTACT AREA.
3	TERMINAL 3	1	
2	TERMINAL 2	1	PHOSPHOR BRONZE; NICKEL UNDER PLATING OVERALL,GOLD PLATING ON SOLDER AREA;GOLD PLATING ON CONTACT AREA.
1	TERMINAL 1	2	

REVISION			
LTR	DESCRIPTION	DATE	APP
A0	NEW RELEASE	05/20/2020	PECK

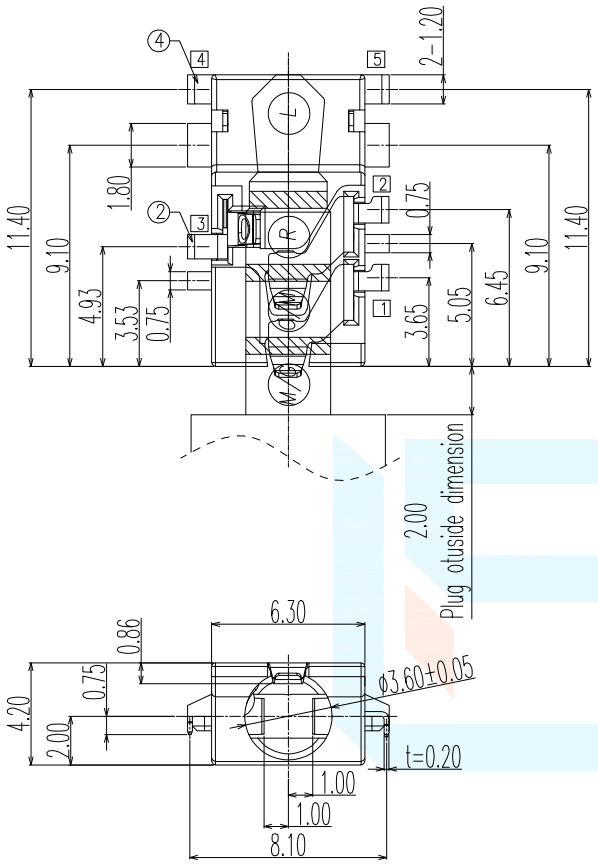

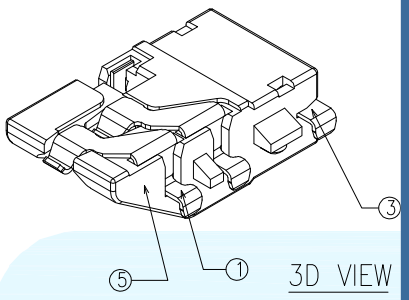

3D VIEW

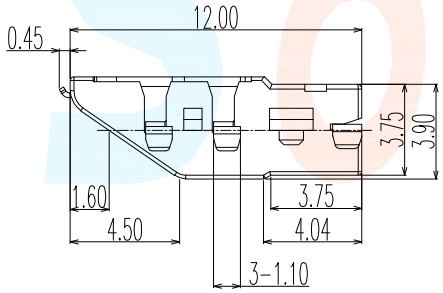

SPECIFICATION:

1. ELECTRICAL CHARACTERISTICS
   - 1-1. CURRENT RATING:DC 1.0A MAX.
   - 1-2:VOLTAGE RATING:DC 12V.
   - 1-3:CONTACT RESISTANCE:50mΩ MAX.(INITIAL)
     100mΩ MAX.(AFTER LIFE TEST)
   - 1-4. INSULATION RESISTANCE:100MΩ MIN. AT 500V DC.
   - 1-5. WITHSTANDING VOLTAGE:500V AC FOR 1 MINUTE.
2. MECHANICAL CHARACTERISTICS
   - 2-1. LIFE TEST:5000 CYCLES MIN,
   - 2-2. MATING FORCE:3～30N,
     UNMATING FORCE:3～30N.

邀您使用(微信)小程序
硕方电子开关&连接器选型手册
手机扫码即可进入...

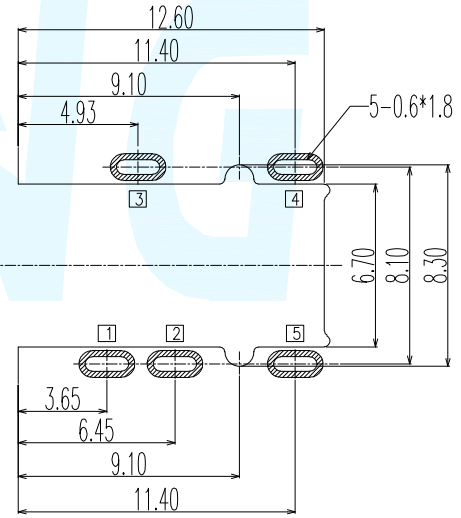

RECOMMENDED P.C.B LAYOUT
TOP VIEW (TOLRANCE:±0.05)

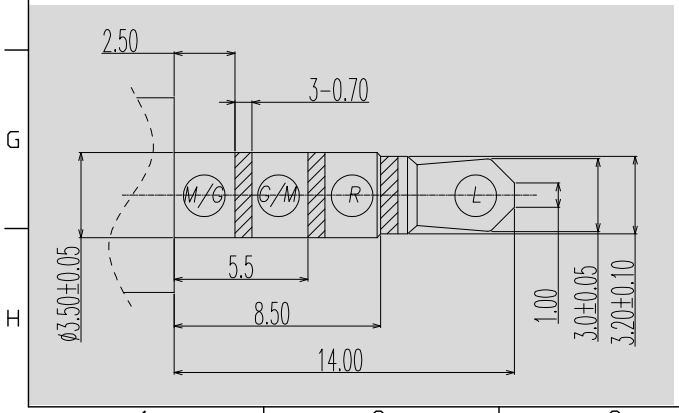

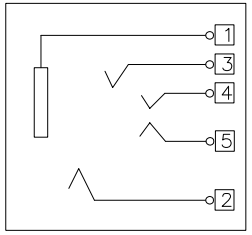

SCHEMATIC



DIMENSION CLASSIFICATION
■ : CRITICAL
☒ : MAJOR

TOLERANCE TABLE		
.X	±	0.40
.XX	±	0.25
.XXX	±	0.10
ANGLE	±	2°

台灣碩方精密電子科技有限公司
TAIWAN SOFNG PRECISION ELECTRONIC CO., LTD

TITLE	PJ-369G 反向沉板2.0mm 斜口式弯脚四段耳机插座			SOFNG 開關,連接器	
PART NO.	SOF-G006			SERIES	SD106
APPROVED	Peck	DWG NO.	SOF-G006		
CHECKED	Paul	SCALE	1:1	UNIT mm	SIZE A4
DRAWIN	David			REV A0	SHEET NO. 1/1