TACT SWITCH

Operation: SMT/中型立式 防水 轻触开关 [柄长/操作力可定制]

IP-68 | RoHS Compliant 2011/65/EU | Compliant Halogen Free

LTEM NO.: TS-1160S-7016Q (Series)

(L6.20mm×W6.20mm TACT-SWITCH)

表面贴装 SMT

正向操作

精密部品 NICETY

可靠 STABILIZE

適合環保 RoHS



Technical parameter

PROJECT \ LEVEL		A[better product]	B[average product]
Electrical Properties	Contact Rating	0.25A, 24V DC	
	Initial Contact Resistance	50mΩ max.	
	Insulation Resistance	100MΩ min.500V DC Skey/PD：100MΩ min.300V DC	
	Withstand Voltage	300V AC for 1 minute	250 V AC for 1 minut
Durable Performance	There No Load	100,000 Cycles	75,000 Cycles
	Rated Load	80,000 Cycles	50,000 Cycles
Sterage temp.		-35℃～+75℃(Operating Temp:)	
Operating Force		2.6N.(1N.=100gram-force)	
Heat Rrsistance		IR Reflow:255℃,5sec. Manual:350℃,3sec.	

Material declaration

No.	NAME	Description
① A	按柄	PBT/ABS 塑料
② B	盖板	PA6T (Black)热塑性尼龙
③ C	缓层	硅胶片
④ D	贴纸	PI 聚酰亚胺
⑤ E	簧片	镀银&不锈钢/SUS304
⑥ F	基座	PA6T (Black)热塑性尼龙
⑦ G	嵌件	镀银&H62 黄铜

CIRCUIT DIAGRAM

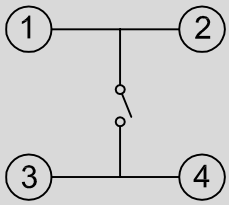

Unit:mm

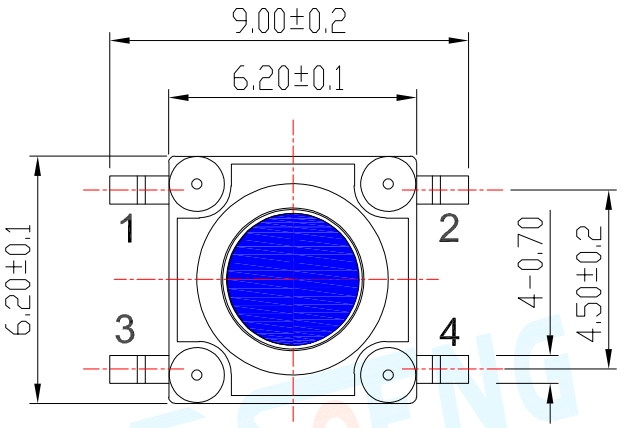

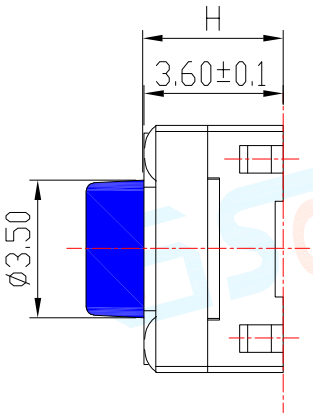

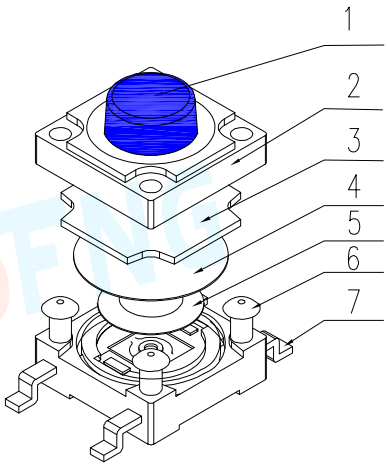

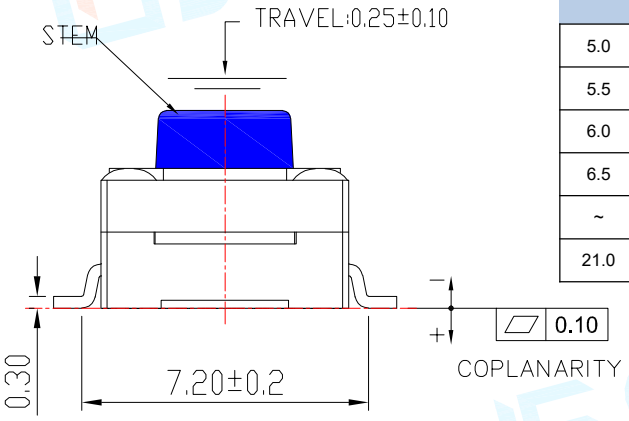

H
5.0
5.5
6.0
6.5
~
21.0

P.C.B LAYOUT

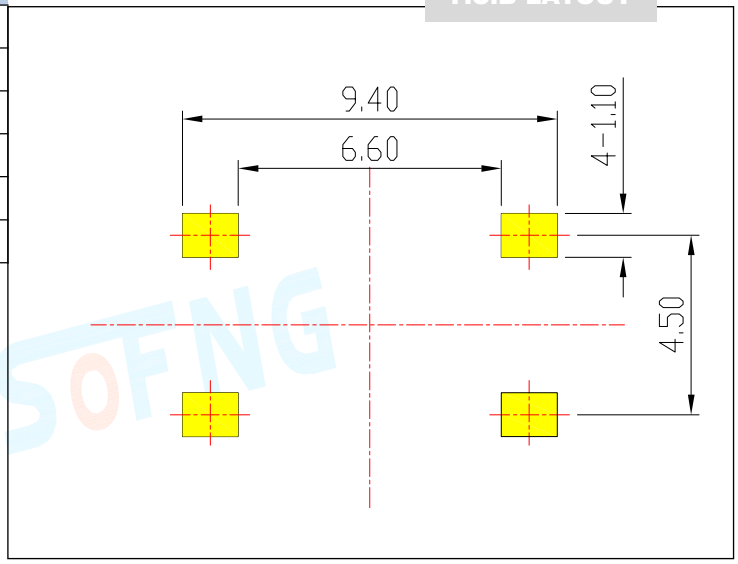

TS-1160S - XX XXQ

- 产品型号
- 高度 50=5.0mm 21=21.0mm
- 力度 16=160gf 26=260gf

SOFNG