WGM6306

Features:

- ☐ TrenchFET Power MOSFET
- ☐ Surface Mount Package
- ☐ Low On-resistance
- ☐ Unrivalled Gate Charge :Qg= 2.3nC (Typ.)
- ☐ BVDSS=-20V,ID=-3.0A
- ☐ RDS(on) : 115mΩ (Max) @VG=-4.5V
- ☐ 100% Avalanche Tested

SOT-23-6L

RoHS COMPLIANT

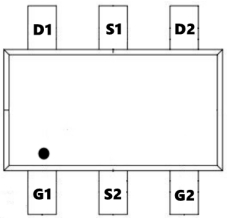

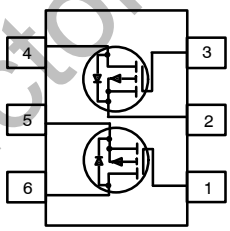

PIN CONNECTIONS

ABSOLUTE MAXIMUM RATINGS (T_a=25℃ unless otherwise noted)

Symbol	Parameter		Value	Units
V_{DS}	Drain-to-Source Voltage		-20	V
V_{GS}	Gate-to-Source Voltage		±12	V
I_D	Continuous Drain Current	T_A = 25°C	-3.0	A
		T_A = 100°C	-1.5	
I_{DM}	Pulsed Drain Current (1)		10	A
P_D	Power Dissipation	T_A = 25°C	1.0	W
$R_{\theta JA}$	Thermal Resistance, Junction to Ambient(2)		130	°C/W
T_J, T_{STG}	Junction & Storage Temperature Range		-55 to 150	°C

WildGoose Semiconductor

Electrical Characteristics (T_A=25℃unless otherwise noted)

Parameter	Symbol	Condition	Min	Typ	Max	Unit
Off Characteristics						
Drain-Source Breakdown Voltage	BV_{DSS}	V_{GS}=0V I_D=-250μA	-20	-24	-	V
Zero Gate Voltage Drain Current	I_{DSS}	V_{DS}=-20V,V_{GS}=0V	-	-	-1	μA
Parameter	**Symbol**	**Condition**	**Min**	**Typ**	**Max**	**Unit**
Gate-Body Leakage Current	I_{GSS}	V_{GS}=±12V,V_{DS}=0V	-	-	±100	nA
On Characteristics (Note 3)						
Gate Threshold Voltage	$V_{GS(th)}$	V_{DS}=V_{GS},I_D=-250μA	-0.4	-0.66	-1	V
Drain-Source On-State Resistance	$R_{DS(ON)}$	V_{GS}=-4.5V, I_D=-2A	-	94	115	mΩ
		V_{GS}=-2.5V, I_D=-1A	-	118	150	mΩ
Forward Transconductance	g_{FS}	V_{DS}=-5V,I_D=-2A	4	-	-	S
Dynamic Characteristics (Note4)						
Input Capacitance	C_{lss}	V_{DS}=-10V,V_{GS}=0V, F=1.0MHz	-	251	-	PF
Output Capacitance	C_{oss}		-	58	-	PF
Reverse Transfer Capacitance	C_{rss}		-	32	-	PF
Switching Characteristics (Note 4)						
Turn-on Delay Time	$t_{d(on)}$	V_{DD}=-10V,I_D=-1A V_{GS}=-4.5V,R_{GEN}=3Ω	-	9.8	-	nS
Turn-on Rise Time	t_r		-	4.9	-	nS
Turn-Off Delay Time	$t_{d(off)}$		-	20.5	-	nS
Turn-Off Fall Time	t_f		-	7	-	nS
Total Gate Charge	Q_g	V_{DS}=-10V,I_D=-3A, V_{GS}=-4.5V	-	2.3	-	nC
Gate-Source Charge	Q_{gs}		-	0.45	-	nC
Gate-Drain Charge	Q_{gd}		-	0.75	-	nC
Drain-Source Diode Characteristics						
Diode Forward Voltage (Note 3)	V_{SD}	V_{GS}=0V,I_S=-3A	-	-	-1.2	V
Diode Forward Current (Note2)	I_S		-	-	-3	A

WildGoose Semiconductor

Notes:

1. Repetitive Rating: Pulse width limited by maximum junction temperature.
2. Surface Mounted on FR4 Board, t ≤ 10 sec.
3. Pulse Test: Pulse Width ≤ 300μs, Duty Cycle ≤ 2%.
4. Guaranteed by design, not subject to production

Typical Performance Characteristics

Figure1: Output Characteristics

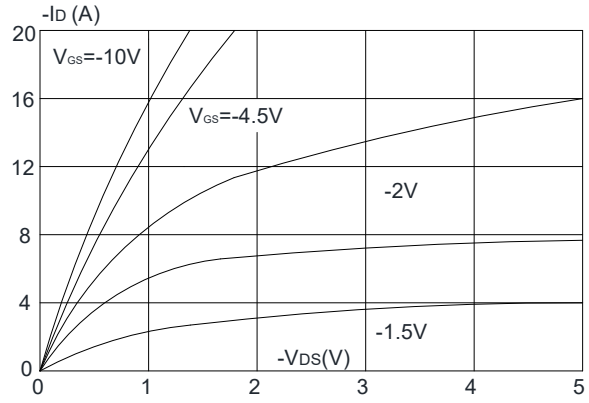

Figure 2: Typical Transfer Characteristics

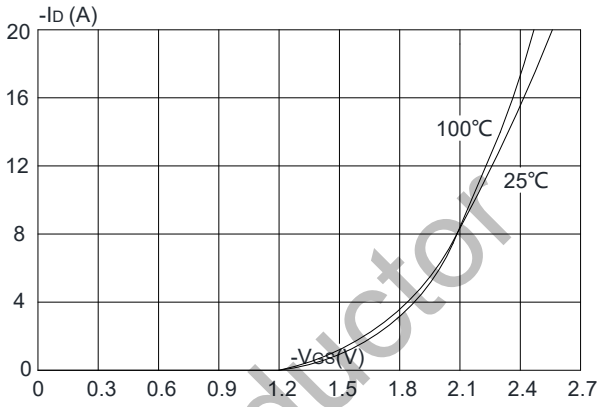

Figure 3: On-resistance vs. Drain Current

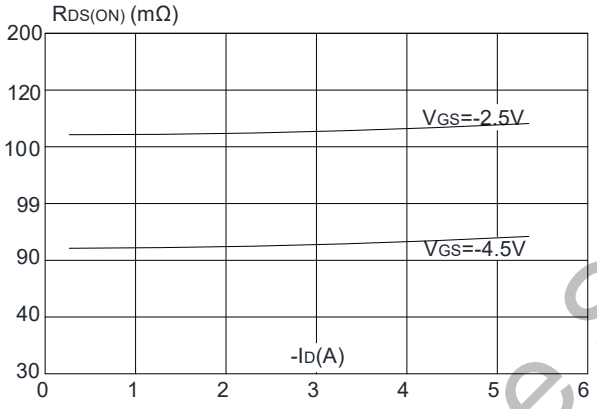

Figure 4: Body Diode Characteristics

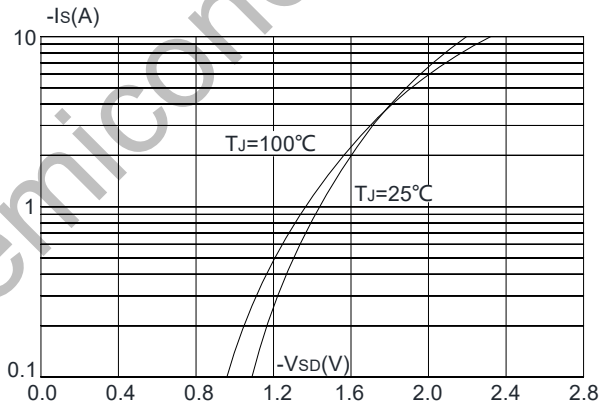

Figure 5: Gate Charge Characteristics

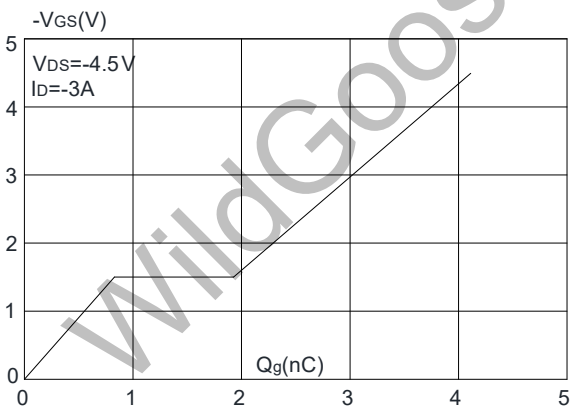

Figure 6: Capacitance Characteristics

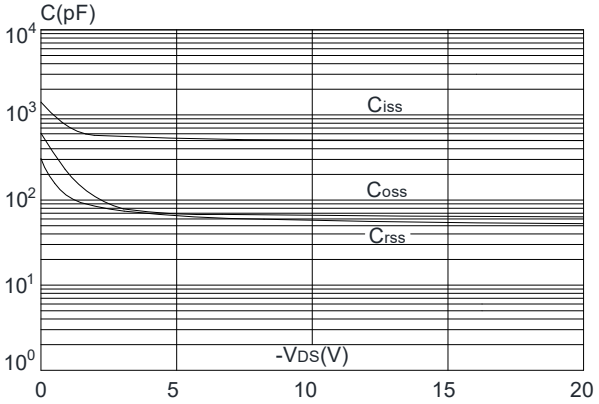

WildGoose Semiconductor

Typical Performance Characteristics

Figure 7: Normalized Breakdown Voltage vs. Junction Temperature

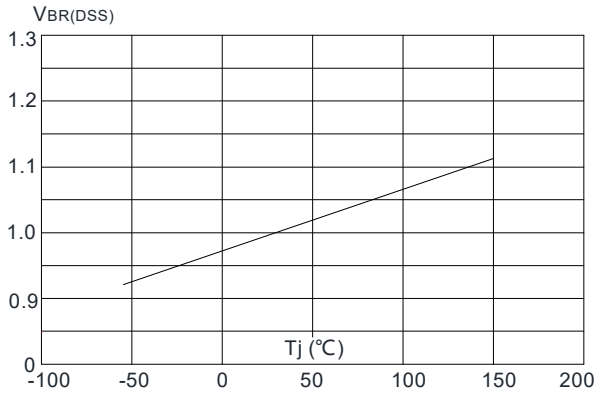

Figure 8: Normalized on Resistance vs. Junction Temperature

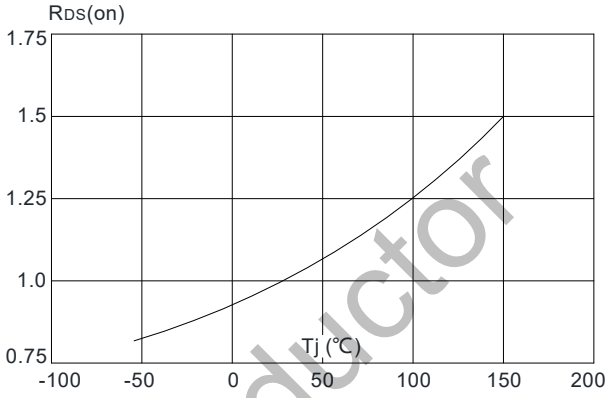

Figure 9: Maximum Safe Operating Area

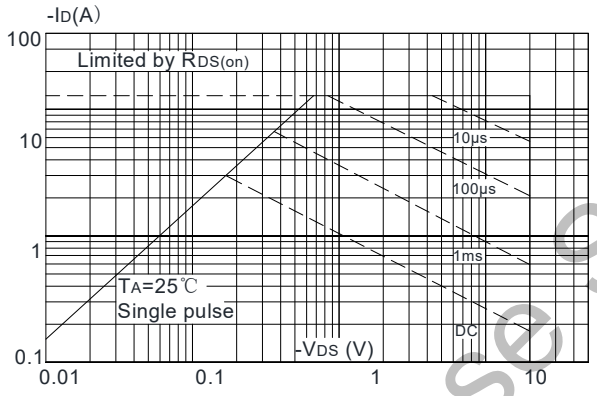

Figure 10: Maximum Continuous Drain Current vs. Ambient Temperature

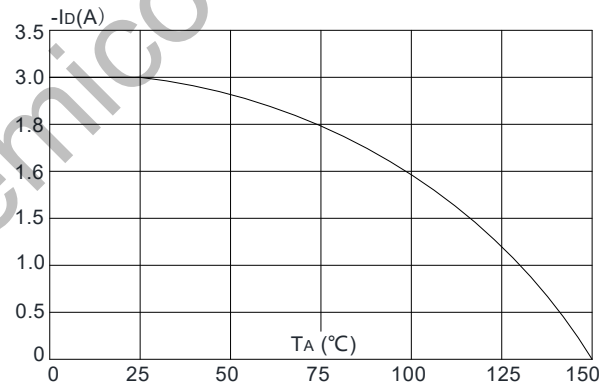

Figure.11: Maximum Effective Transient Thermal Impedance, Junction-to-Ambient

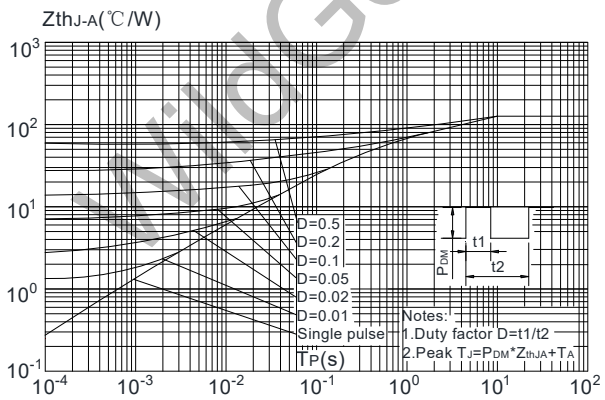

WildGoose Semiconductor

Test Circuit

Gate Charge Test Circuit & Waveform

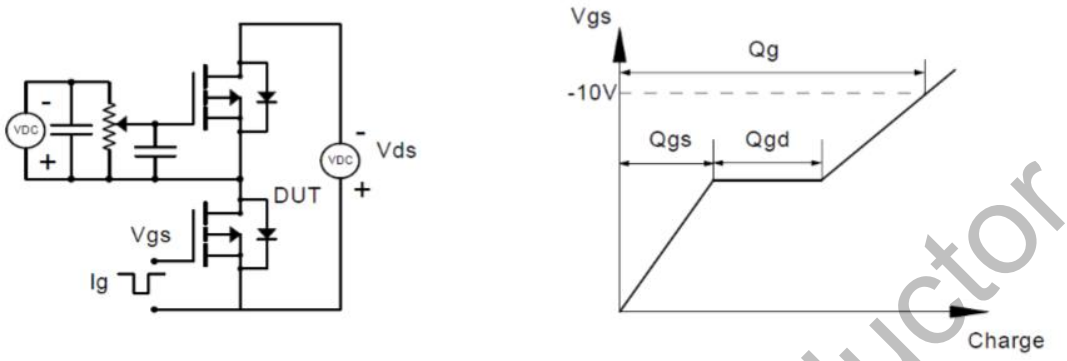

Resistive Switching Test Circuit & Waveforms

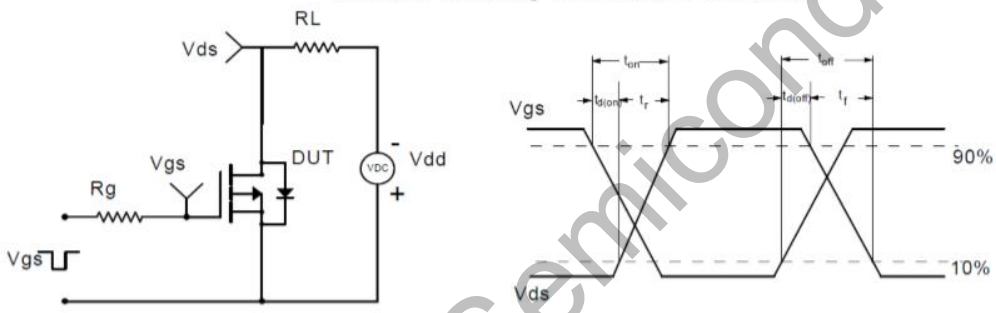

Unclamped Inductive Switching (UIS) Test Circuit & Waveforms

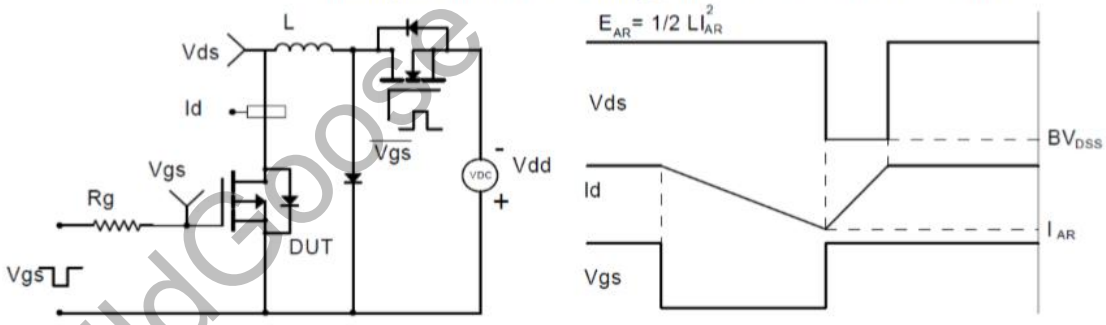

Diode Recovery Test Circuit & Waveforms

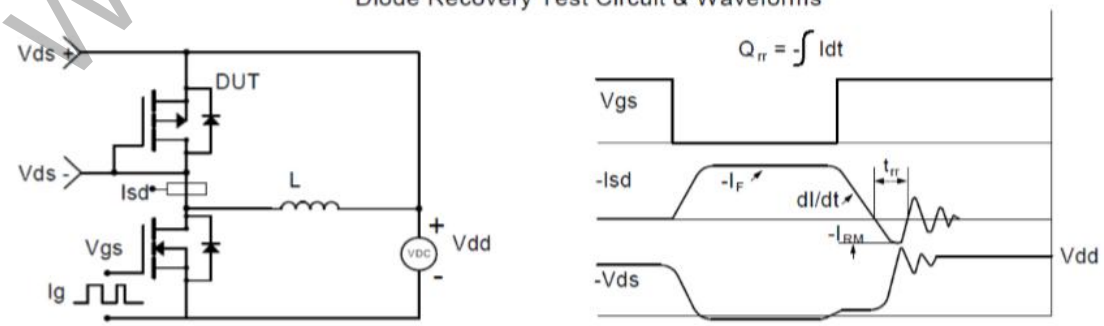

WildGoose Semiconductor

Package Dimension

SOT-23-6

Unit: mm

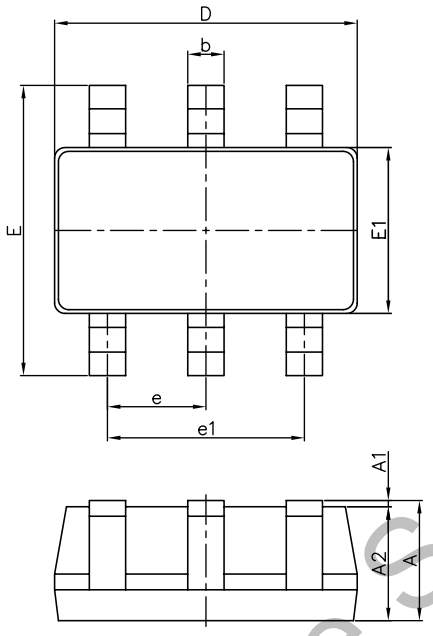

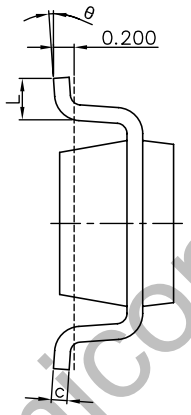

Symbol	Dimensions In Millimeters		Dimensions In Inches	
	Min.	Max.	Min.	Max.
A	1.050	1.250	0.041	0.049
A1	0.000	0.100	0.000	0.004
A2	1.050	1.150	0.041	0.045
b	0.300	0.500	0.012	0.020
c	0.100	0.200	0.004	0.008
D	2.820	3.020	0.111	0.119
E1	1.500	1.700	0.059	0.067
E	2.650	2.950	0.104	0.116
e	0.950(BSC)		0.037(BSC)	
e1	1.800	2.000	0.071	0.079
L	0.300	0.600	0.012	0.024
θ	0°	8°	0°	8°

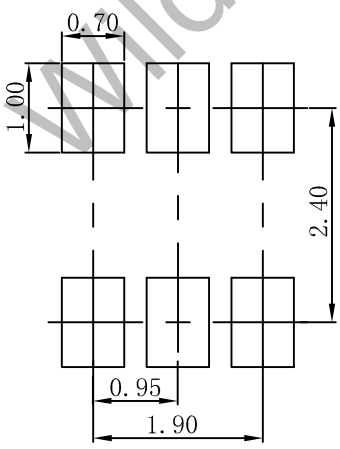

Note:
1.Controlling dimension:in millimeters.
2.General tolerance:± 0.05mm.
3.The pad layout is for reference purposes only.

WildGoose Semiconductor