品　名	颜 色
RT-C18-C00W-AA	白 色
RT-C18-C00B-AA	黑 色

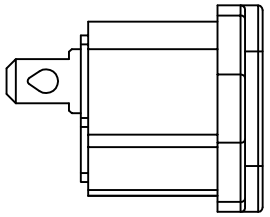

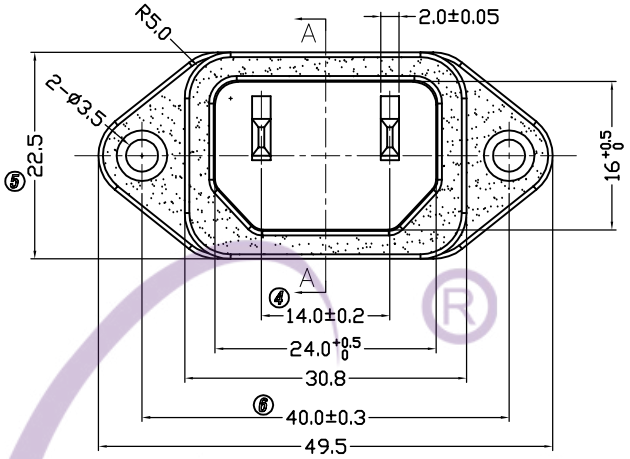

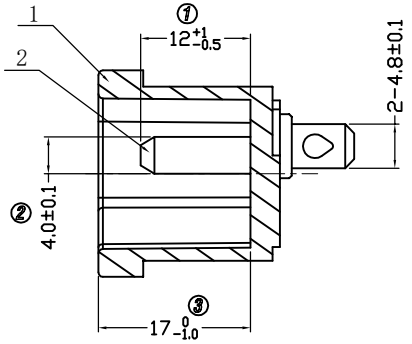

SECTION A-A

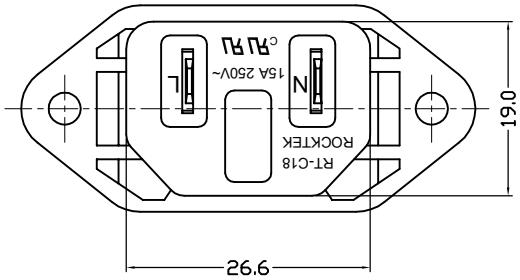

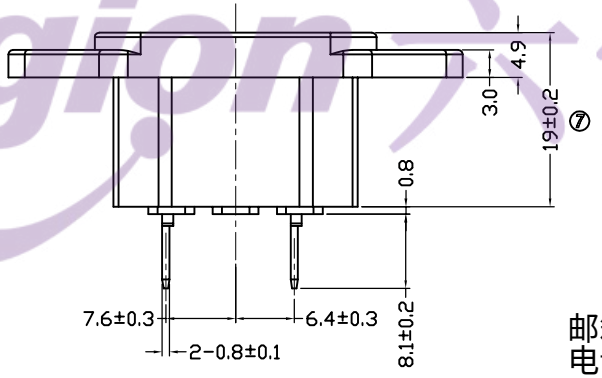

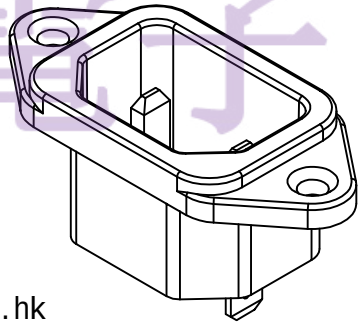

legion六鈞電子

邮箱：hooya89@hooya.hk
电话：0769-82310511-867

NOTES:
1. Electrical rating: 15A 250VAC (UL:CUL)
2. Insulation resistance: >100MΩ Min 500VDC
3. Dielectric strength: >2000V 1 minute

NO.	PART NAME	MATERIAL	Q'TY
2	1# pin	C2680 1/2H Tin-plating	2
1	BODY	PA66+30%GF UL94V-0	1

NO	DESCRIPTION
5	
4	
3	
2	
1	

NO	DESCRIPTION
10	
9	
8	
7	
6	

DIMENSIONAL TOLERANCES	
RANGE	TOLERANCE
20≤	±0.40
10~20	±0.30
≤10	±0.20
ANGLES	±1°

APPROVED	CHECKED	DESIGN	DRAWN
			LMC 2026.01.17

legion® legion-switch.com 东莞市六钧电子五金有限公司

ALL SIZE ARE IN	MM
SCALE	NO
MAT'L	***
MATERIAL NO.	RT-C18-C00*-AA
DRAWING NO.	WIF126068
REV.	A0