东莞市诚润电子科技有限公司
Chevron Electronic Technology Co Ltd
广东省东莞市厚街镇宝宏路鼎昊高新科技产业园 D 栋二楼
2nd Floor of Building D, Baohong Road Dinghao High-New Technology Industrial Park, Houjie Dongguan, Guangdong
Tel: +86 769-85888841 E-mail:ccre@chevronfuse.com
Web:www.chevronfuse.com

承 认 书

Specification For Approval

产品信息 Product information

产 品 名 称Product name： Φ5*20 玻璃管欧规慢断型保险丝
ϕ5*20 ceramic European standardtube Time late type fuse

产 品 规 格Product model： 5T/5TP xxA250V

拟 制 Prepared By	确 认 Reviewed By	批 准 Approved By
雷淑贤	邓 波	方 剑

客户承认 Customer Approval

客户名称 Customer name:

客户料号 Customer P/N:

经 办 Prepared By	审 核 Reviewed By	批 准 Approved By
确认结果 Verify the results：		
☐合格 Qualified	☐不合格 Unqualified	不合格原因 Root cause:

生效日期 Effective Date: 年 YY 月 MM 日 DD

1.如果本承认书获得贵司认可，请您签名后拷贝一份回传给我们。
If this acknowledgement letter is approved by your company, please sign it and send us a copy
2.当您下订单给诚润电子时，烦请在订单中列出上面产品信息表格中的产品名称和产品规格。
When you place an order with Chengrun Electronics, please kindly list the product names and specifications in the product information table above in the order form

变更履历

内　容	日　期	确 认
修改封面；增加履历页；修改内容；增加信赖性测试；完善产品特性项，	2025. 5. 5	方 剑
9.C 增加存储条件；9.D.1 修改波峰焊条件	2026.7.1	方 剑
明确电阻范围±20%	2026.8.19	方 剑
增加 10：编带数量和编带包装信息	2026.8.20	方 剑
增加 500mA/1A/1.25A/1.6A/2A/2.5A/3.15A/4A/5A/6.3A/8A/10A 的 KC 认证	2026.10.10	李尚品

编　制	确　认	批　准
李尚品	邓　波	方　剑

1.适用范围 / Scope of Application

本产品适用于各类电子设备电路的过流保护作用，广泛应用于家电、控制板、电器设备以及等领域。

This product is applicable to the overcurrent protection of various electronic equipment circuits, and is widely used in household appliances, control boards, electrical equipment and other fields

2.适用测试标准/ Standards

遵循 IEC60127-2; UL248-14

In accordance with IEC60127-2; UL248-14

3.单体结构及编带尺寸 / Structure and dimensions of individual units and tape

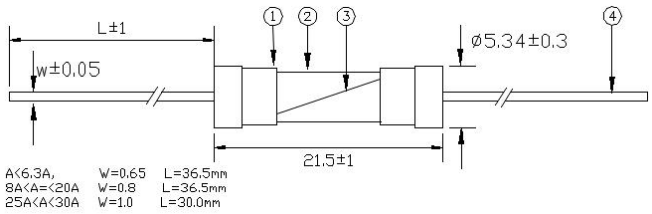	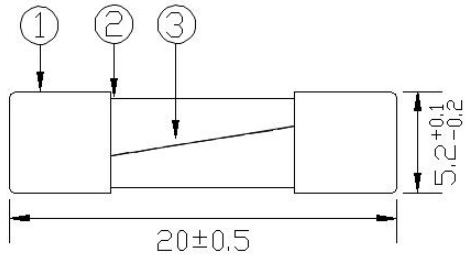
5TP	5T
	请参考左边实物图 Please refer to the picture on the left for the physical image **5T=不带引线 Without lead** **5TP=带引线 With lead**

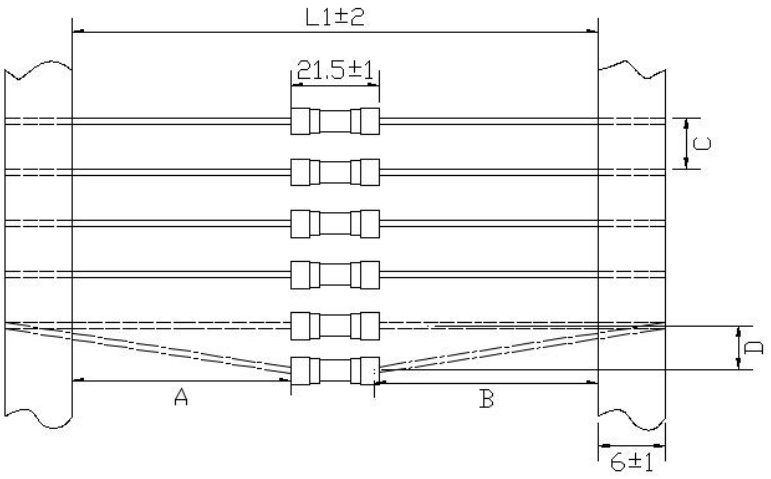

L1(mm)	A-B(mm)	C(mm)	D(mm)
50±2	1.4mm max	10mm	1.2mm Max
63±2	1.4mm max	10mm	1.2mm Max
73±2	1.4mm max	10mm	1.2mm Max

编号 No	名称 Name	材质 Material
1	铜帽 Cap	铜镀镍 Ni Plated Cu
2	玻璃管 Glass tube	玻璃 Glass
3	熔丝 Element	合金 Alloy
4	引线 Lead wire	铜镀锡 Sn plated Cu

4.认证清单/ Certification List

安规标准 Agency	认证电压 Certified	认证电流 Ampere Range	证书编号 Agency File Number
UR-CUR	125V/250V/350/ac	50mA/63mA/,80mA/100mA/125mA/160mA/200mA/250mA/315mA/400mA/500mA/630mA/750mA/800mA/1A/1.6A/2A/2.5A/3.15A/4A/5A/6.3A/8A/10A/12A/12.5A/15A/16A/20A/25A/30A	E358589
TUV	125V/250V/350Vac	100mA/125mA/160mA/200mA/250mA/315mA/400mA/500mA/630mA/750mA/800mA/1A/1.6A/2A/2.5A/3.15A/4A/5A/6.3A/8A/10A/12A/12.5A/15A/16A/20A	J 50677989
CCC	250V	500mA, 1A, 1.25A, 1.6A, 2A, 2.5A, 3.15A, 4A, 5A, 6.3A	2025000207000013
CQC	250V	8A、10A	CQC25012492499
		12.5A、15A、16A、20A	CQC25012492500
KC	250V	1A/1.25A/1.6A/2A/2.5A	SU05044-26005
		8A/10A	SU05044-26006
		3.15A/4A/5A/6.3A	SU05044-26007
		500mA	SU05044-26009

5.产品标示 / Product Markin

保险丝外壳顶部需有下列标示：The top of the fuse cap shall have the following markings

举例：Example

电流范围	A 帽、Cap A	B 帽，Cap B
≦6.3A		5T T2AL250V
≧8A (ext12A)		5T 12.5A a.c. 250V

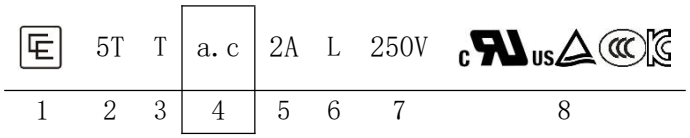

1	工厂徽标：Chevron Logo:	
2	产品名称：Product Name	5T
3	特性符号：Characteristic symbol	T
4	符　　号: symbol	a.c.(有 CQC 符号时)
5	额定电流：Rated Current	2A
6	分断特性：I.R Characteristic s	L（无 CQC 符号时）
7	额定电压：Rated Voltage	250V
8	安规符号：Approval Marks	See the Product Characteristic

注意：A.对于标示的大小和位置没有规定 Size and position of the markings shall not be provided;

B.其它电流对应安规符号请参考产品特性中 Marking 栏 For other current values, please refer to the "Marking" column in the product characteristics for the corresponding safety marking symbols

6.产品外观和形状要求/ Appearance and shape requirements

A. 外观不应出现显著的污点、裂纹，标识应该容易辨识

There shall not be any remarkable stain and crack on the appearances, markings shall be easily legible

B. 引线式玻璃管保险丝

Lead cap type ceramic tube fuse

C. 引脚拉力强度 / Lead Pull Strength

10 牛顿 10±1 秒 / 10N for 10±1 Seconds

D. 引脚弯曲测试/引线必须能够承受弯曲 90°一次

Pin bend test、Bend 90 degrees once

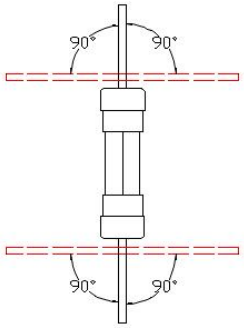

*A 适用于 5T 和 5TP; B,C,D 项适用于 5TP;A is applicable to 5T and 5TP; B, C and D are applicable to 5TP

7.产品特性/Product Characteristic

Part No	Rated urrent	Rated Voltage	Typic Cold DCR(mΩ ±20%)	Breaking Capacity	I^2T A^2s	Safety Approvals
5T/5TP01000250	100mA	250V	-	35A@250Vac (50mA~1A) 100A@250Vac (1.25A~3.15A) 200A@250Vac (4A~10A) 750A@125Vac (12A~30A) 300A@350Vac (12A~20A) 600A@250Vac (12A~30A)	/	
5T/5TP01250250	125mA	250V	-		/	
5T/5TP01600250	160mA	250V	-		/	
5T/5TP02000250	200mA	250V	-		/	
5T/5TP02500250	250mA	250V	-		/	
5T/5TP03150250	315mA	250V	-		/	
5T/5TP04000250	400mA	250V	-		/	
5T/5TP05000250	500mA	250V	190		1.11	

5T/5TP06300250	630mA	250V	150		1.50	
5T/5TP08000250	800mA	250V	103		2.273	
5T/5TP11000250	1A	250V	78		5.523	
5T/5TP11250250	1.25A	250V	53		10.138	
5T/5TP11600250	1.6A	250V	39.5		8.15	
5T/5TP12000250	2A	250V	32		10.980	
5T/5TP12500250	2.5A	250V	24		20.525	
5T/5TP13150250	3.15A	250V	19.5		32.368	
5T/5TP14000250	4A	250V	14.5		54.390	
5T/5TP15000250	5A	250V	10.5		132.25	
5T/5TP16300250	6.3A	250V	8.5		169	
5T/5TP28000250	8A	250V	7.1		281.60	
5T/5TP21000250	10A	250V	5.1		534.29	
5T/5TP21200250	12A	250V	4.1		873	
5T/5TP21250250	12.5A	250V	4.2		990	
5T/5TP21500250	15A	250V	-		/	
5T/5TP21600250	16A	250V	-		/	
5T/5TP22000250	20A	250V	-		/	

*1. 不带引线为 5T,带引线料号为 5TP;the leadless one is 5T,The leaded part number is 5TP;
例：5T13150250 表示不带引线 3.15A250V，5T13150250 indicates 3.15A 250V without lead
5TP13150250 表示带引线 3.15A250V，5T13150250 indicates 3.15A 250V with lead
2. 加引线在料号和标签上带 P 体现 The lead wire should be marked with "P" on the part number and label

8.特性测试/ characteristic test

测试条件/Test Condition

A. 所有的测试环境温度保持在 25±10°的范围内

All the test environments are maintained within the temperature range of 25 ± 10 ° C

B. IT 特性测试参考下表/IT Characteristic test follow up the form

额定电流的% % of Ampere Rating	熔断时间 Opening Time	
	50mA-10A	12.5A~20A
150%	3600s Min	1800s Min
210%	120s Max	1800s Max
275%	600ms~10 s	600 ms~10 s
400%	150 ms~3 s	150 ms~5 s
1000%	20ms ~300ms	20ms ~400ms

C. 时间电流曲线参考图/IT time current curve

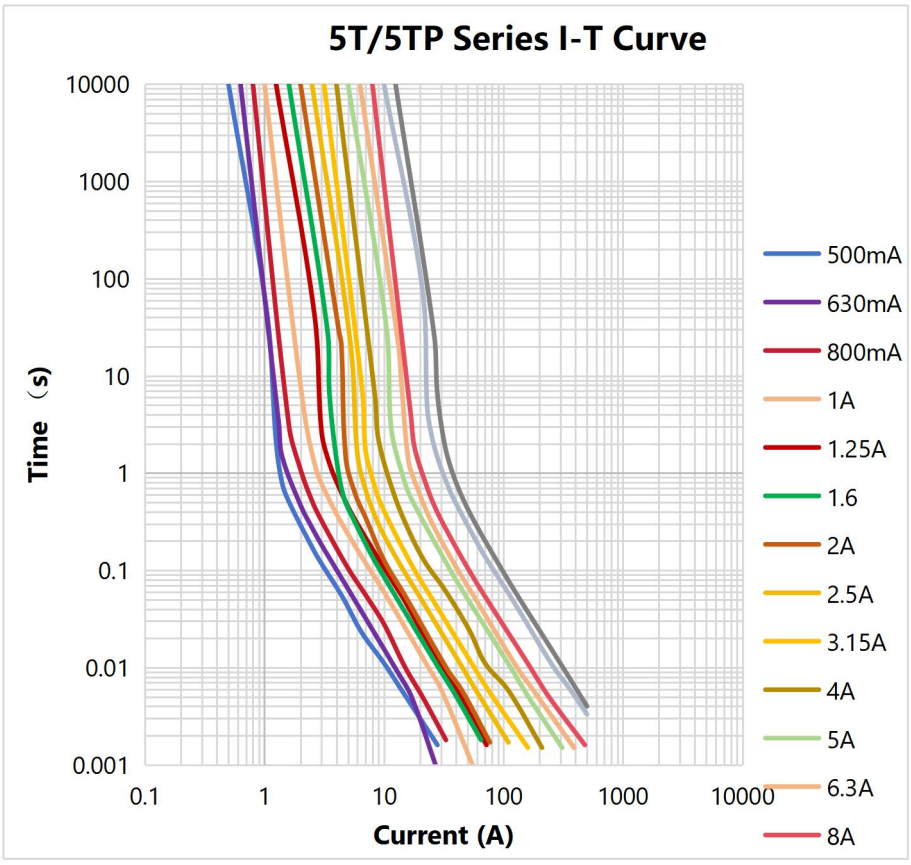

9.环境特性/ Environmental Characteristic

A．正常操作温度范围-55℃～+125℃

Operarting temperature -55℃～+125℃ nomal

B．若工程师在设计保险丝安装的环境温度超出 25℃时，需要考虑环境温度对保险丝的寿命影响，请参考下面：温度-电流曲线图

If the engineer finds that the ambient temperature where the fuse is installed exceeds 25℃, he/she needs to consider the influence of ambient temperature on the lifespan of the fuse. Please refer to the following:Temperature - Current Curve Chart

Temperature Rerating Curve

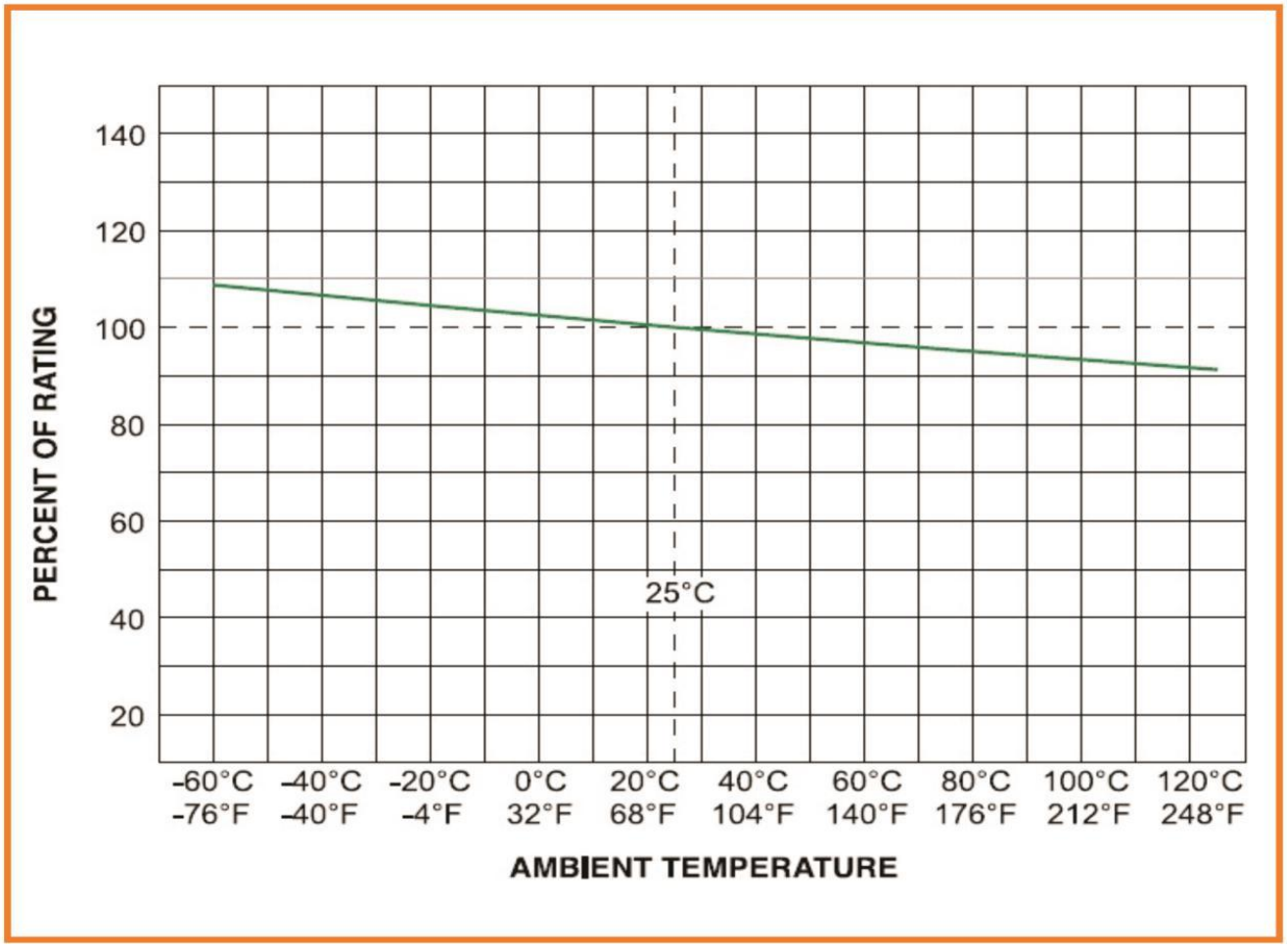

C．存储条件 / Storage Conditions

在温度+5℃~30℃、相对湿度 25% ~ 60%的密闭条件下可存放 2 年。

Under airtight in temperature+5℃~ 30℃、relative humidity 25% ~ 60% can store 2 years.

在温度+10℃~60℃、相对湿度为 95%的非露天下最多可存放 30 天。

Without dew in temperature+10℃~ 60℃、relative humidity be 95% maximum value for 30days.

D. 建议客户焊接参数

1. 波峰焊参数 / Wave Parameters:

锡炉温度及焊接时间 / Solder Pot Temperature: 265℃ ±5℃; Solder Dwell Time: 5~6s

2．手工焊参数 / Hand-Solder Parameters:

烙铁温度及焊接时间 / Solder Iron Temperature: 370±10℃; Heating Time: 3s Max

E．建议客户安装时参考以下尺寸：Recommend that customers refer to the following dimensions during installation

样式 A Style A	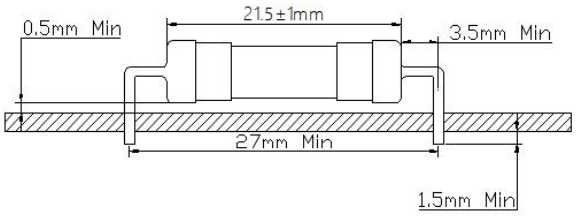
样式 B Style B	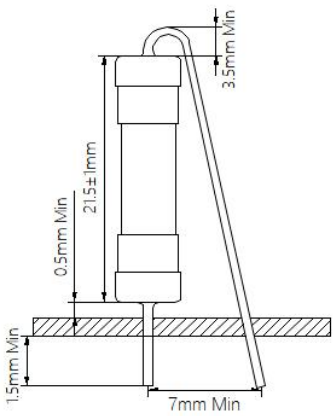

F. 信赖性测试/Reliability test

编号 No	项目 Item	内容 content
1	绝缘阻抗测试 Insulation Resistance test	100000Ω Minimal
2	可焊性测试 Solderability test	240±5℃; T=3±0.5s; Cover≧95%
3	耐焊接热测试 Soldering heat resistance test	260℃ 10s; IΔRI<10%
4	热冲击测试 Thermer shock	100 ctcles between -65℃~+125℃ 60minite; each extreme IΔRI<10%
5	高低温储存 High-low temperature storege	+125℃/-55℃ each 96 hrs; IΔRI<10%
6	高温操作 High temperature operating life	70±2℃; 0.6In;96hrs; IΔRI<10%
7	盐雾测试 Salt spray test	5% salt solution; 48hrs; IΔRI<10%
8	耐温性测试 Humidity test	T=40±2℃,90%-95%RH;1000hrs, IΔRI<10%

10.包装 / Packaging

1.包装袋/盒上标签需明确产品料号，产品电压/电流及安规符号等信息;

The labels on the packaging bags/boxes should clearly indicate the product part number, product voltage/current and safety symbols, etc

2.包装材料均符合 ROHS/REACH/HF 的环保要求， 且包装材料不会和零件发生化学反应，造成不良;

The packing material conforms to ROHS/REACH/HF environmental protection request. And the packing materials will not have the chemical reaction with the components

3.散装产品和编带产品信息/ Bulk and type reel informatiion

包装选项 Packaging Option	胶袋数量(pcs) Plastic bag Quantity	内盒数量(pcs) Inner box Quantity	外箱数量(pcs) Outer box Quantity	内部磁间距(mm) Inside Tape Spacing
散装 Bulk	500	2000	20000	N/A
散装(带引线) Bulk(with pigtail type)	200	800	8000	N/A

编带 Tape	NA	1000	8000	NA

4.其它定制可协商/ Other customization can be negotiated

5.包装盒尺寸图/ Packaging Box Dimension Diagram

散装产品内盒尺寸↓ Dimensions of the inner box for bulk products	散装产品外箱尺寸↓ Dimensions of the outer carton for bulk products
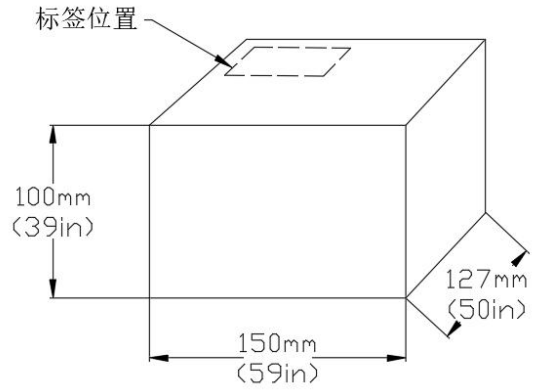	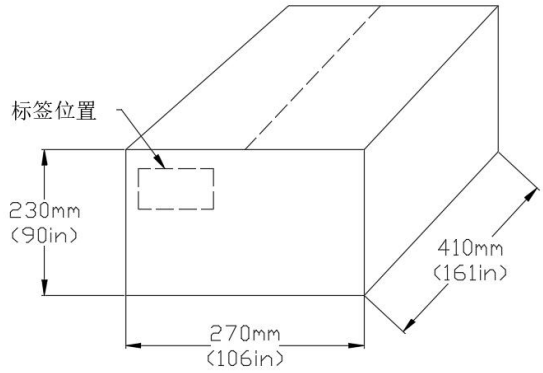
编带产品内盒尺寸 Dimensions of the inner box for Tape products	编带产品外箱尺寸 Dimensions of the outer carton for Tape products
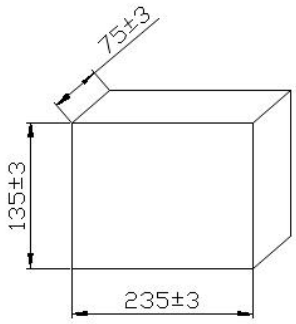	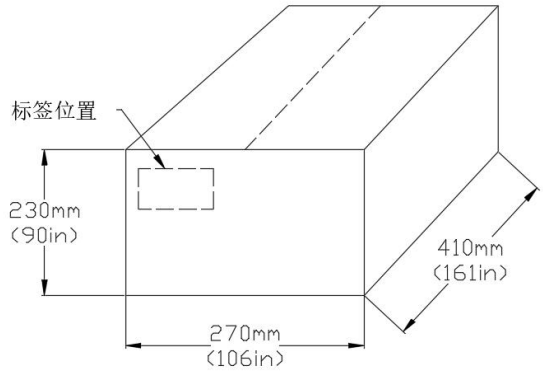

11.其它/Other

1.如果在使用中超出本规格书要求，须经双方协商确认；

If the requirements exceed those stipulated in this specification during the usage, it shall be confirmed through consultation between both parties.

2.如果本规格书有不适当的地方，须经过双方协商由本公司修改；

If there is anything inappropriate in this specification, it shall be revised by our company after mutual consultation between both parties