WGD30P10A

TO-252

RoHS COMPLIANT

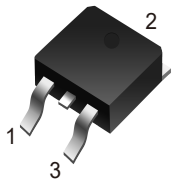

Features:

- ☐ Advanced Trench Technology.
- ☐ Excellent Switching Characteristics.
- ☐ Extended Safe Operating Area.
- ☐ Unrivalled Gate Charge :Qg=44.5 nC (Typ.).
- ☐ BVDSS=--100V ,I_D=-30A
- ☐ R_{DS}(on) : 95mΩ (Max) @V_G=10V
- ☐ 100% Avalanche Tested

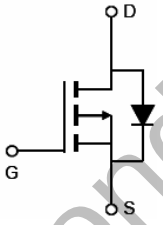

1.Gate (G)
2.Drain (D)
3.Source (S)

Absolute Maximum Ratings (T_C=25℃unless otherwise noted)

Symbol	Parameter	Rating	Units
V_{DS}	Drain-Source Voltage	-100	V
V_{GS}	Gate-Source Voltage	±20	V
I_D@T_C=25℃	Continuous Drain Current, V_{GS} @ -10V[1]	-30	A
I_D@T_C=100℃	Continuous Drain Current, V_{GS} @ -10V[1]	-15	A
I_{DM}	Pulsed Drain Current[2]	-75	A
EAS	Single Pulse Avalanche Energy[3]	157.2	mJ
I_{AS}	Avalanche Current	18.9	A
P_D@T_C=25℃	Total Power Dissipation[4]	54	W
T_{STG}	Storage Temperature Range	-55 to 150	℃
T_J	Operating Junction Temperature Range	-55 to 150	℃
$R_{\theta JA}$	Thermal Resistance Junction-Ambient [1]	62	℃/W
$R_{\theta JC}$	Thermal Resistance Junction-Case[1]	2.3	℃/W

WildGoose Semiconductor

Electrical Characteristics (T_J=25℃, unless otherwise noted)

Symbol	Parameter	Conditions	Min.	Typ.	Max.	Unit
BV_{DSS}	Drain-Source Breakdown Voltage	V_{GS}=0V , I_D=-250uA	-100	---	---	V
$R_{DS(ON)}$	Static Drain-Source On-Resistance[2]	V_{GS}=-10V , I_D=-10A	---	78	95	mΩ
		V_{GS}=-4.5V , I_D=-8A	---	86	110	
$V_{GS(th)}$	Gate Threshold Voltage	V_{GS}=V_{DS} , I_D =-250uA	-1.2	-1.7	-2.5	V
I_{DSS}	Drain-Source Leakage Current	V_{DS}=-100V , V_{GS}=0V , T_J=25℃	---	---	-50	uA
I_{GSS}	Gate-Source Leakage Current	V_{GS}=±20V , V_{DS}=0V	---	---	±100	nA
gfs	Forward Transconductance	V_{DS}=-10V , I_D=-10A	---	24	---	S
Q_g	Total Gate Charge	V_{DS}=-50V , V_{GS}=-10V , I_D=-20A	---	44.5	---	nC
Q_{gs}	Gate-Source Charge		---	9.13	---	
Q_{gd}	Gate-Drain Charge		---	5.93	---	
$T_{d(on)}$	Turn-On Delay Time	V_{DD}=-50V , V_{GS}=-10V , R_G=3.3 , I_D=-10A	---	12	---	ns
T_r	Rise Time		---	27.4	---	
$T_{d(off)}$	Turn-Off Delay Time		---	79	---	
T_f	Fall Time		---	53.6	---	
C_{iss}	Input Capacitance	V_{DS}=-20V , V_{GS}=0V , f=1MHz	---	3029	---	pF
C_{oss}	Output Capacitance		---	129	---	
C_{rss}	Reverse Transfer Capacitance		---	76	---	
I_S	Continuous Source Current[1,5]	V_G=V_D=0V , Force Current	---	---	-18	A
V_{SD}	Diode Forward Voltage[2]	V_{GS}=0V , I_S=-1A , T_J=25℃	---	---	-1.2	V
t_{rr}	Reverse Recovery Time	I_F=-8A , di/dt=-100A/μs , T_J=25℃	---	38.7	---	nS
Q_{rr}	Reverse Recovery Charge		---	22.4	---	nC

Note :

1.The data tested by surface mounted on a 1 inch FR-4 board with 2OZ copper.

2.The data tested by pulsed , pulse width ≦ 300us , duty cycle ≦ 2%

3.The EAS data shows Max. rating . The test condition is V^{DD}=-25V,V^{GS}=-10V,L=0.88mH,I^{AS}=-18.9A

4.The power dissipation is limited by 150℃ junction temperature

5 .The data is theoretically the same as I_D and I_{DM} , in real applications , should be limited by total power dissipation.

WildGoose Semiconductor

Typical Electrical and Thermal Characteristics (Curves)

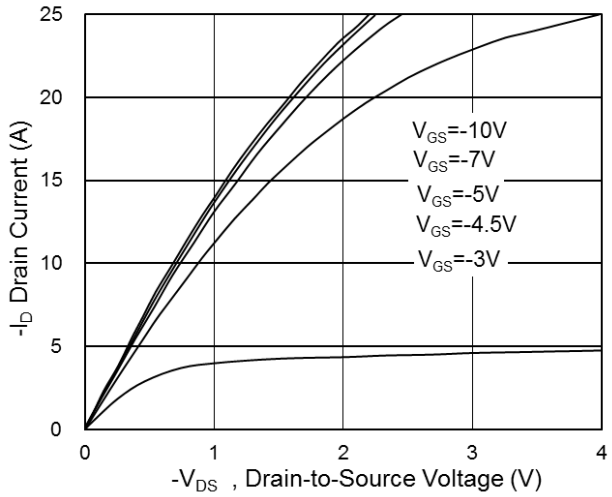

Fig.1 Typical Output Characteristics

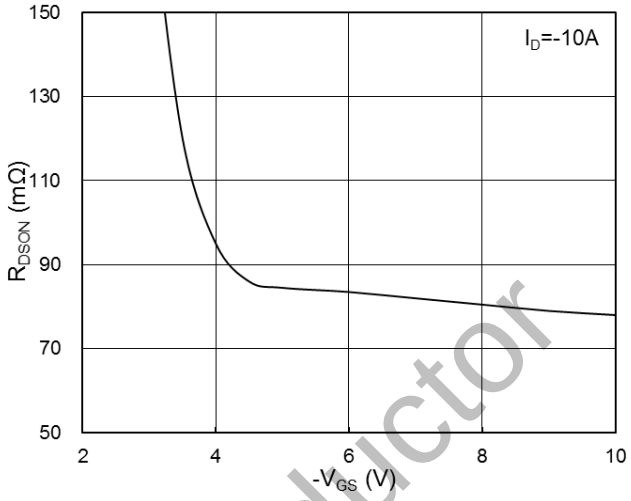

Fig.2 On-Resistance vs G-S Voltage

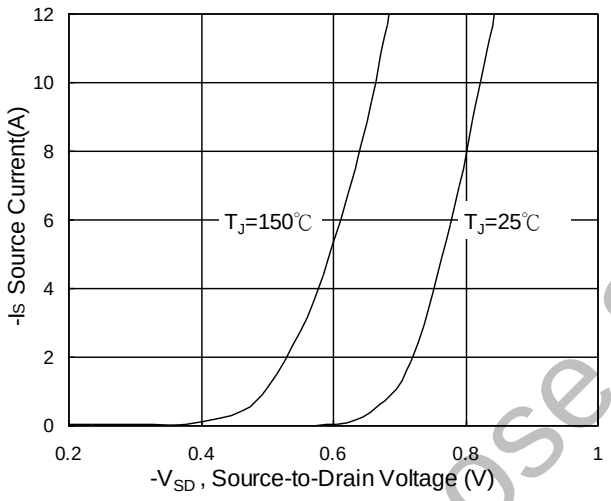

Fig.3 Typical S-D Diode Forward Voltage

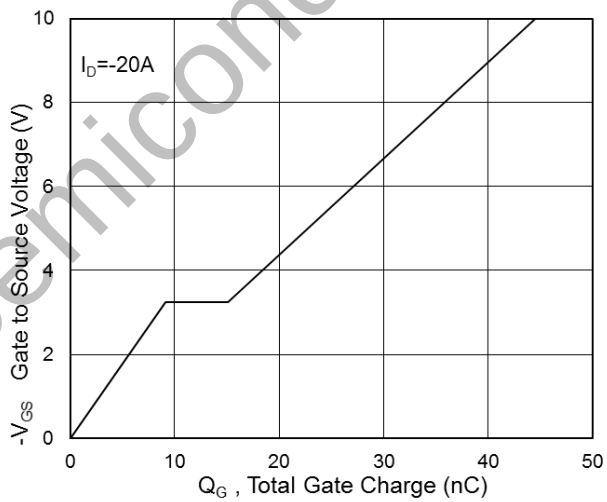

Fig.4 Gate-Charge Characteristics

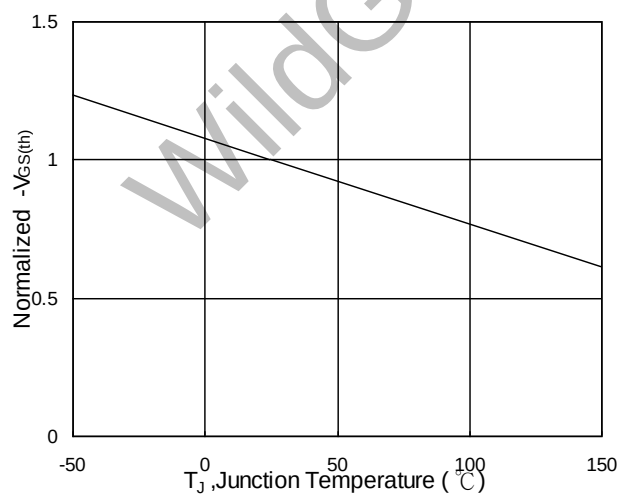

Fig.5 Normalized $V_{GS(th)}$ vs T_J

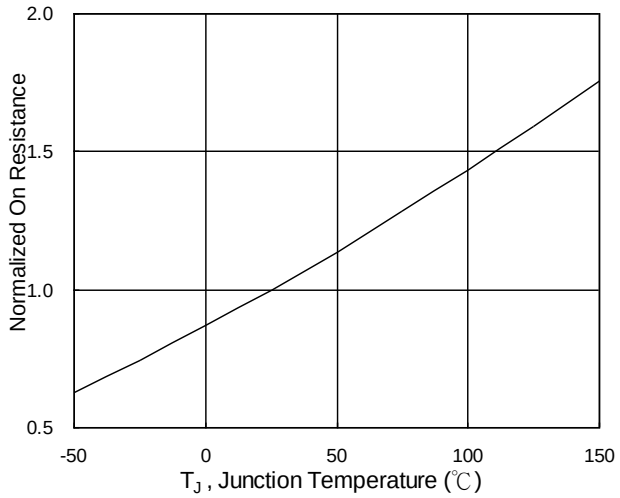

Fig.6 Normalized R_{DSON} vs T_J

WildGoose Semiconductor

Typical Electrical and Thermal Characteristics (Curves)

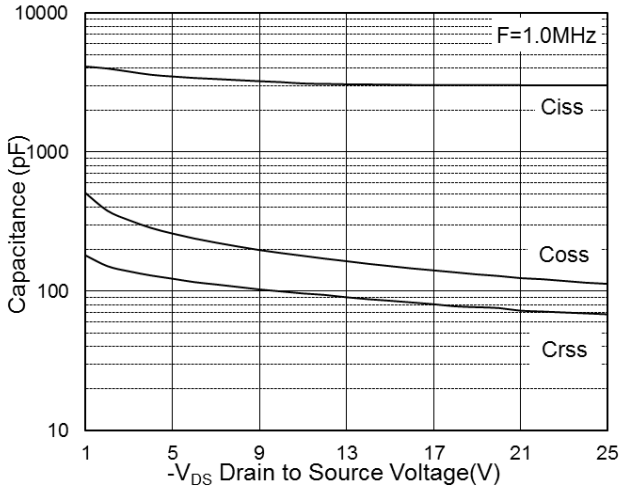

Fig.7 Capacitance

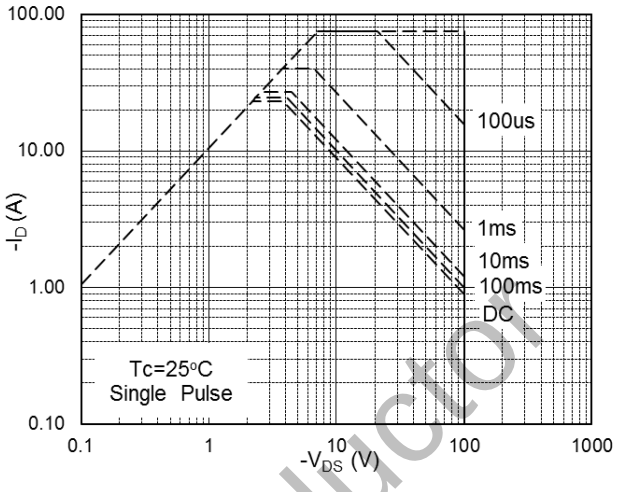

Fig.8 Safe Operating Area

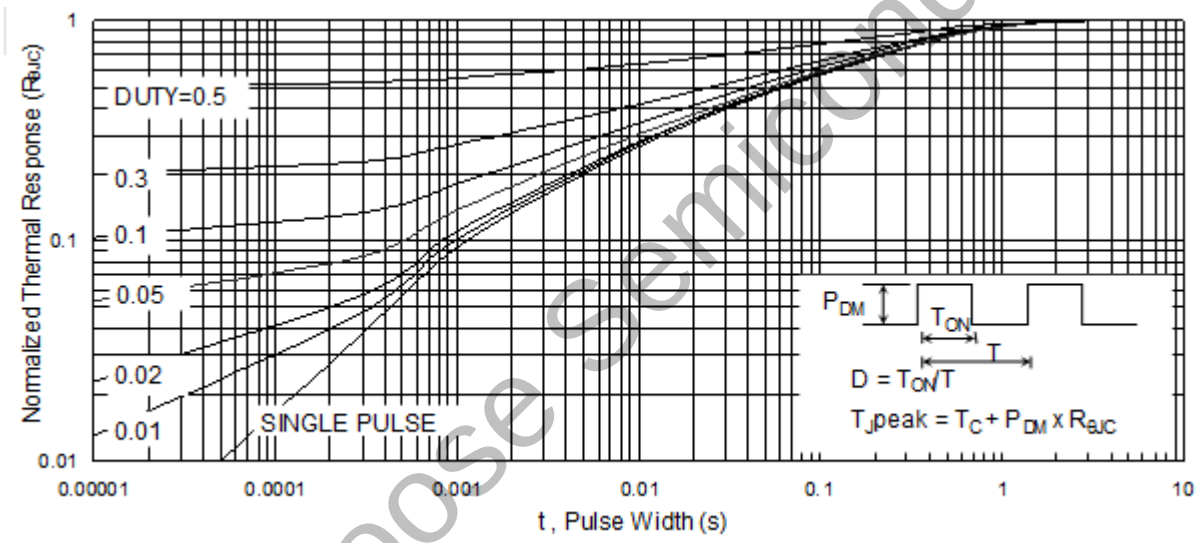

Fig.9 Normalized Maximum Transient Thermal Impedance

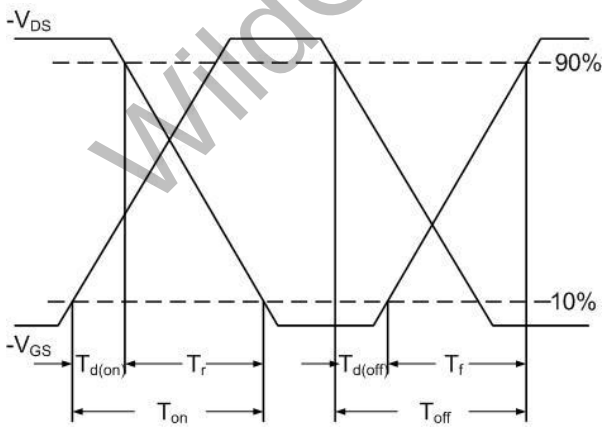

Fig.10 Switching Time Waveform

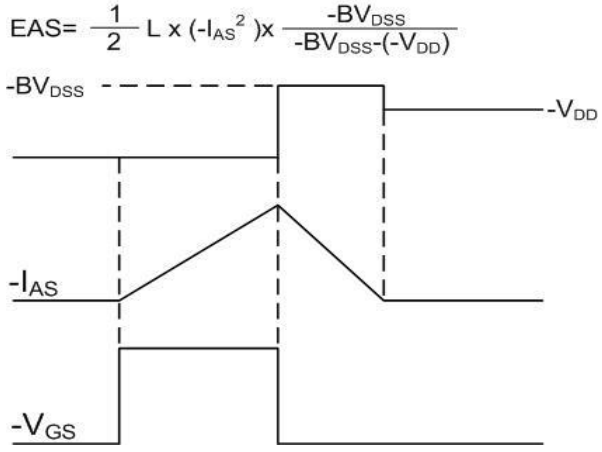

Fig.11 Unclamped Inductive Waveform

WildGoose Semiconductor

Test Circuit

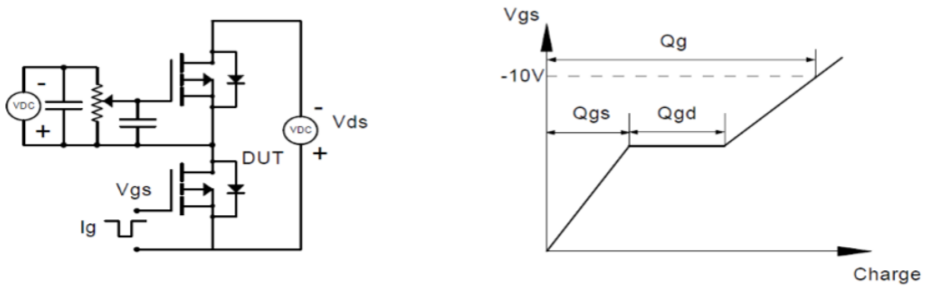

Figure 1: Gate Charge Test Circuit & Waveform

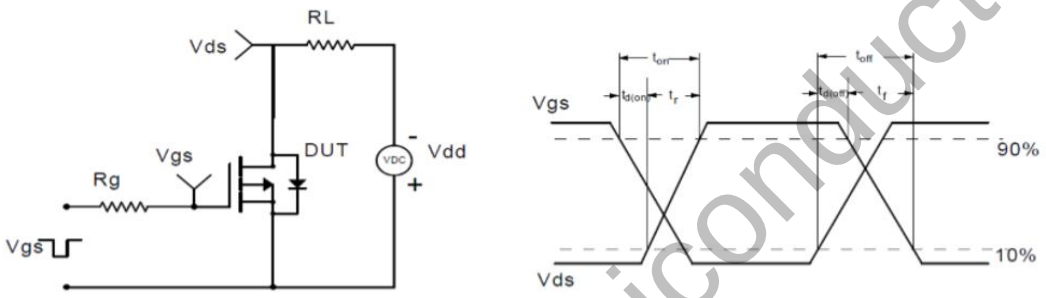

Figure 2: Resistive Switching Test Circuit & Waveform

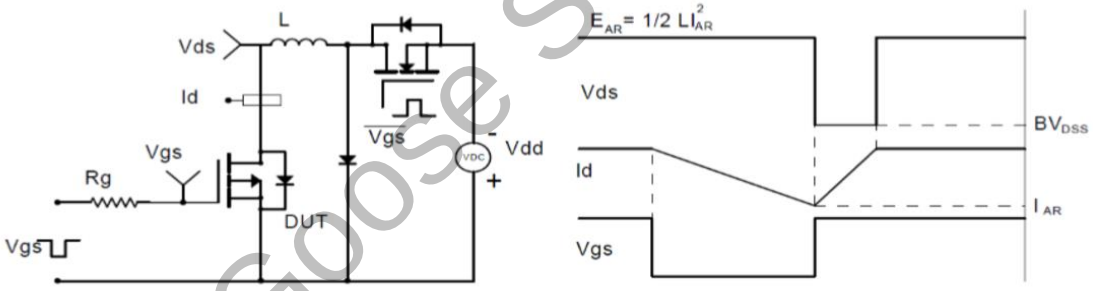

Figure 3: Unclamped Inductive Switching Test Circuit& Waveform

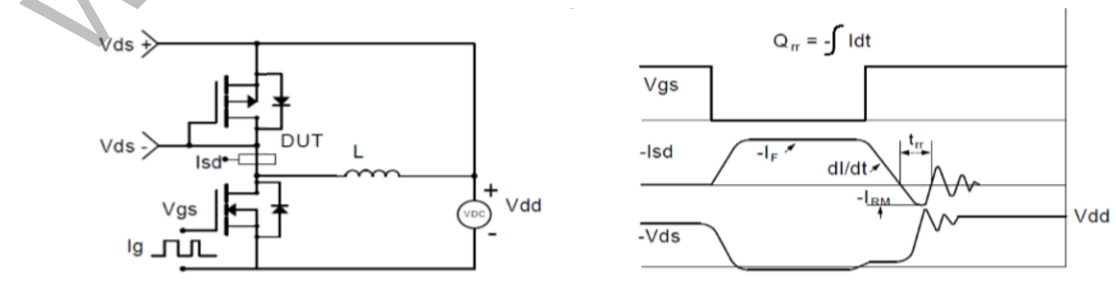

Figure 4: Diode Recovery Test Circuit & Waveform

WildGoose Semiconductor

Package Dimension

TO-252

Units：mm

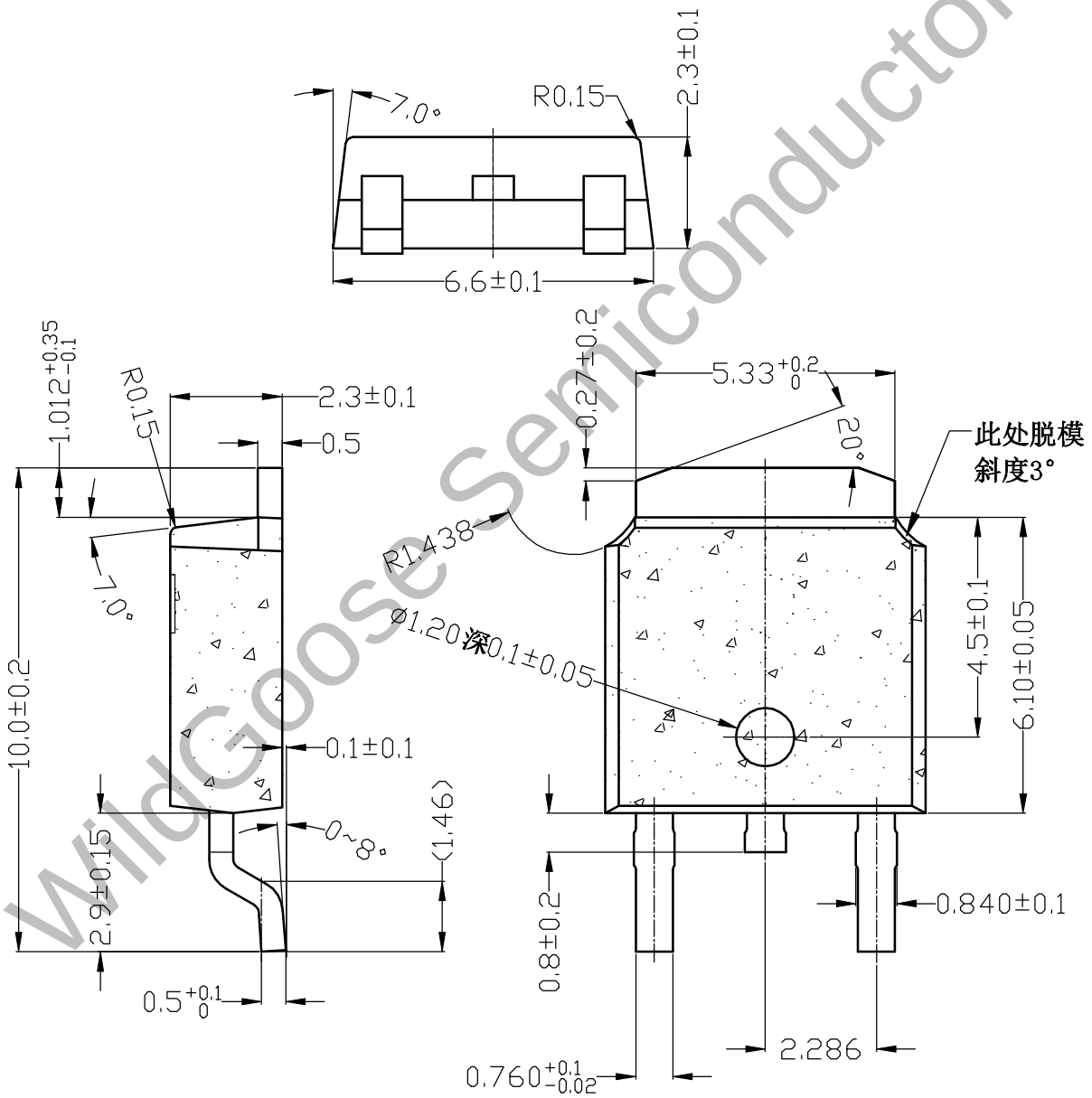

WildGoose Semiconductor