WGNP5V30

Features:

- ☐ Surface mount package
- ☐ **N-Channel** V_{DS} =30V,I_D =5.8A
- ☐ $R_{DS(ON)}$ < 16.9mΩ @ V_{GS}=10V
- ☐ $R_{DS(ON)}$ < 24mΩ @ V_{GS}=4.5V
- ☐ **P-Channel** V_{DS} =-30V,I_D =-5.8A
- ☐ $R_{DS(ON)}$ <34mΩ @ V_{GS}=-10V
- ☐ $R_{DS(ON)}$ < 49mΩ @ V_{GS}=-4.5V

PDFN3X3

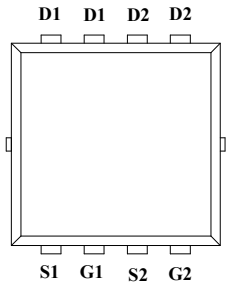

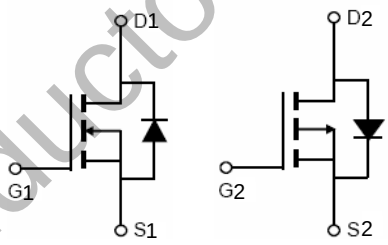

Schematic Diagram

WildGoose Semiconductor

Absolute Maximum Ratings (T_A=25℃ unless otherwise specified)

Parameter		Symbol	N-Channel	P-Channel	Unit
Drain-Source Voltage		V_{DS}	30	-30	V
Gate-Source Voltage		V_{GS}	±20	±20	V
Continuous Drain Current	T_A=25℃	I_D	5.8	-5.8	A
	T_A=70℃		3	-3	
Pulsed Drain Current (Note 1)		I_{DM}	30	-30	A
Maximum Power Dissipation	T_A=25℃	P_D	2.0	2.0	W
Operating Junction and Storage Temperature Range		T_J,T_{STG}	-55 To 150	-55 To 150	℃

Thermal Characteristic

Thermal Resistance,Junction-to-Ambient (Note2)	$R_{\theta JA}$	N-Ch	62.5	℃/W
Thermal Resistance,Junction-to-Ambient (Note2)	$R_{\theta JA}$	P-Ch	62.5	℃/W

Electrical Characteristics (T_A=25℃unless otherwise noted)

Parameter	Symbol	Condition	Min	Typ	Max	Unit
Off Characteristics						
Drain-Source Breakdown Voltage	BV_{DSS}	V_{GS}=0V I_D=250μA	30	33	-	V
Zero Gate Voltage Drain Current	I_{DSS}	V_{DS}=30V,V_{GS}=0V	-	-	1	μA
Gate-Body Leakage Current	I_{GSS}	V_{GS}=±20V,V_{DS}=0V	-	-	±100	nA
On Characteristics (Note 3)						
Gate Threshold Voltage	$V_{GS(th)}$	V_{DS}=V_{GS},I_D=250μA	1.2	1.8	2.4	V
Drain-Source On-State Resistance	$R_{DS(ON)}$	V_{GS}=10V, I_D=5.5A	-	16.9	25	mΩ
		V_{GS}=4.5V, I_D=4.5A	-	24	35	mΩ
Forward Transconductance	g_{FS}	V_{DS}=5V,I_D=5A	-	15	-	S
Dynamic Characteristics (Note4)						
Input Capacitance	C_{lss}	V_{DS}=15V,V_{GS}=0V, F=1.0MHz	-	485.8	-	PF
Output Capacitance	C_{oss}		-	65.2	-	PF
Reverse Transfer Capacitance	C_{rss}		-	54	-	PF
Switching Characteristics (Note 4)						
Turn-on Delay Time	$t_{d(on)}$	V_{DD}=15V, R_L=3Ω V_{GS}=10V,R_{GEN}=3Ω	-	5.0	-	nS
Turn-on Rise Time	t_r		-	3.0	-	nS
Turn-Off Delay Time	$t_{d(off)}$		-	15	-	nS
Turn-Off Fall Time	t_f		-	3.5	-	nS
Total Gate Charge	Q_g	V_{DS}=15V,I_D=5.8A, V_{GS}=10V	-	12.6	-	nC
Gate-Source Charge	Q_{gs}		-	1.9	-	nC
Gate-Drain Charge	Q_{gd}		-	2.6	-	nC
Drain-Source Diode Characteristics						
Diode Forward Voltage (Note 3)	V_{SD}	V_{GS}=0V,I_S=5.8A	-	-	1.2	V
Diode Forward Current (Note 2)	I_S		-	-	5.8	A

Notes:

1. Repetitive Rating: Pulse width limited by maximum junction temperature.
2. Surface Mounted on FR4 Board, t ≤ 10 sec.
3. Pulse Test: Pulse Width ≤ 300μs, Duty Cycle ≤ 2%.
4. Guaranteed by design, not subject to production

WinGoose Semiconductor

Typical Performance Characteristics

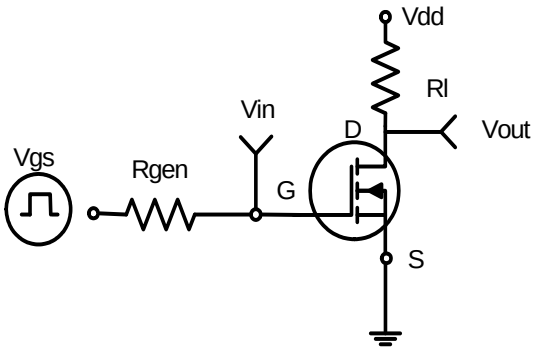

Figure 1:Switching Test Circuit

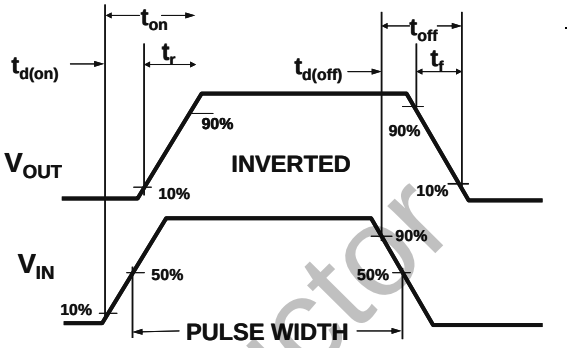

Figure 2:Switching Waveforms

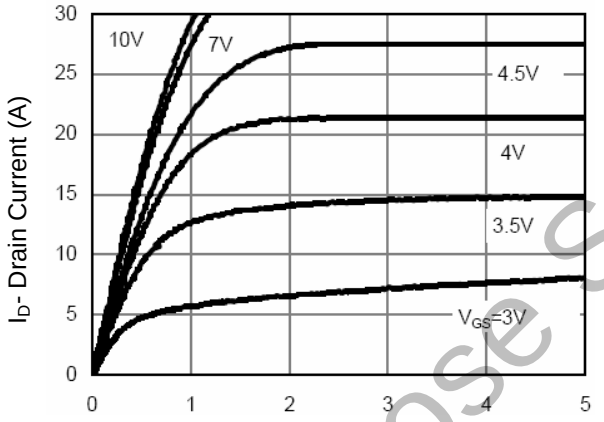

Figure 3 Output Characteristics

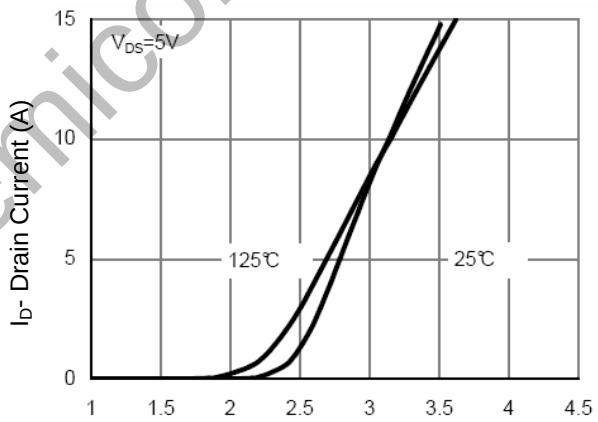

Figure 4 Transfer Characteristics

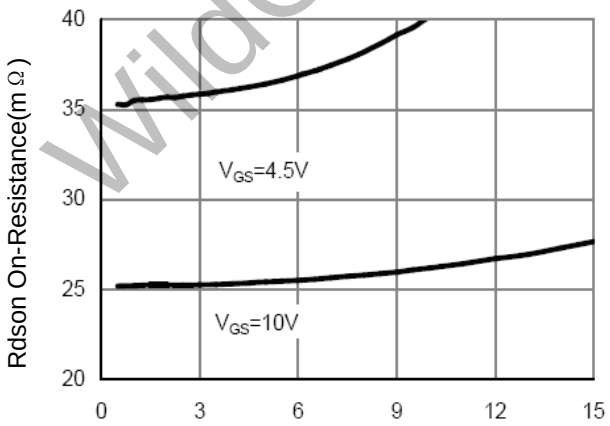

Figure 5 Drain-Source On-Resistance

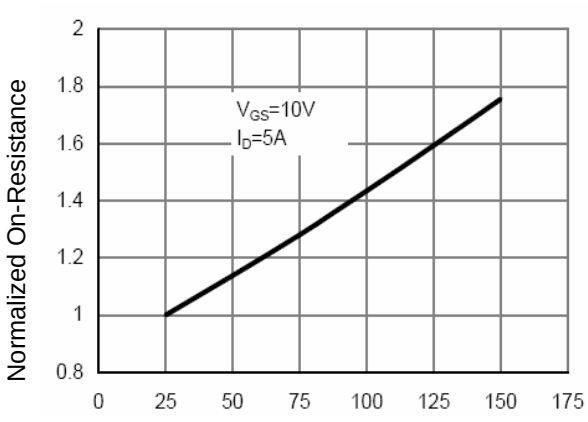

Figure 6 Drain-Source On-Resistance

WildGoose Semiconductor

Typical Performance Characteristics

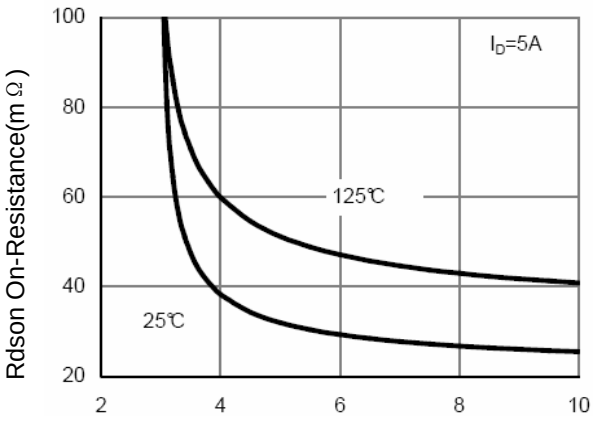

Figure7 Rdson vs Vgs

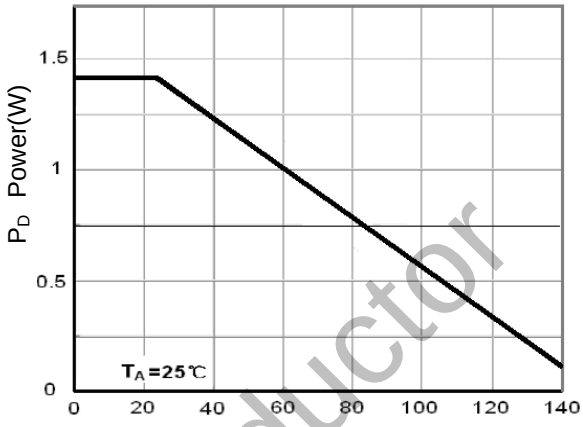

Figure 8 Power Dissipation

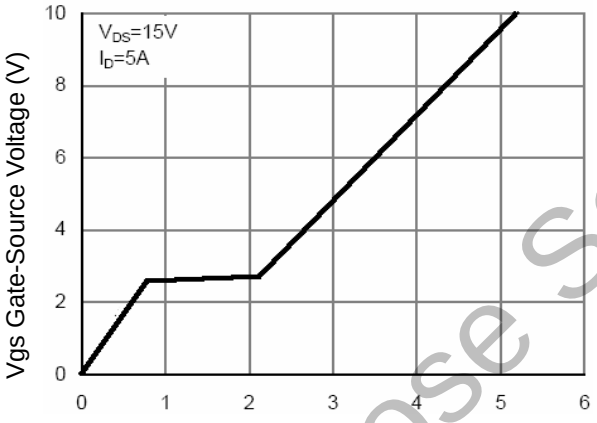

Figure 9 Gate Charge

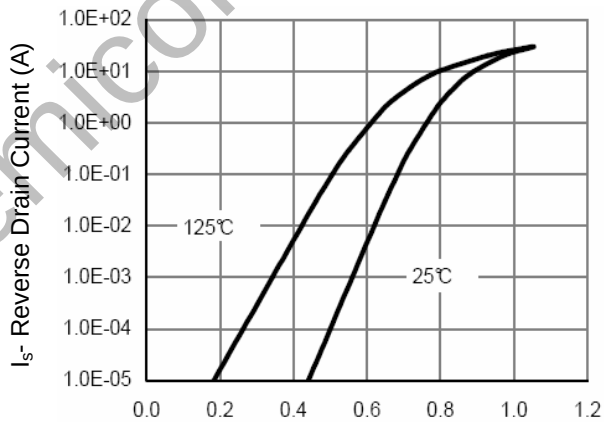

Figure 10 Source- Drain Diode Forward

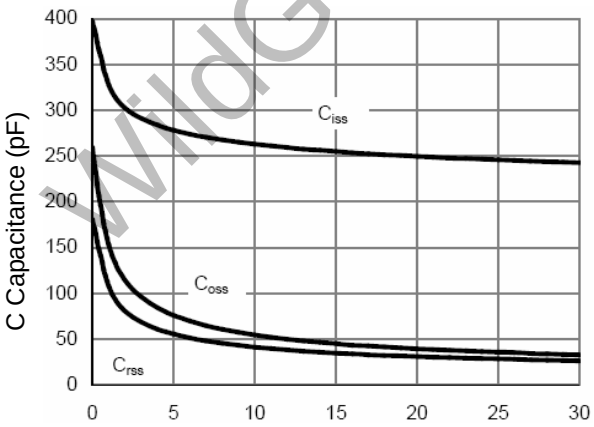

Figure 11 Capacitance vs Vds

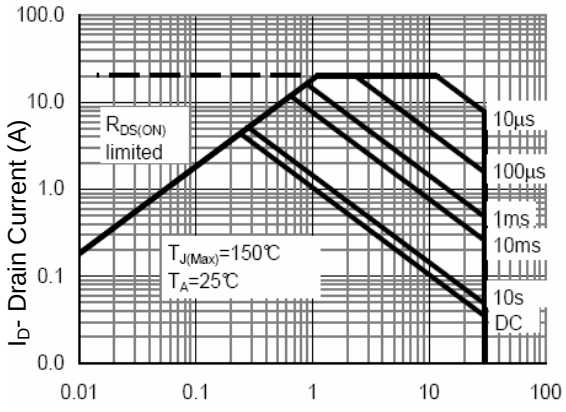

Figure 12 Safe Operation Area

WidGoose Semiconductor

Typical Performance Characteristics

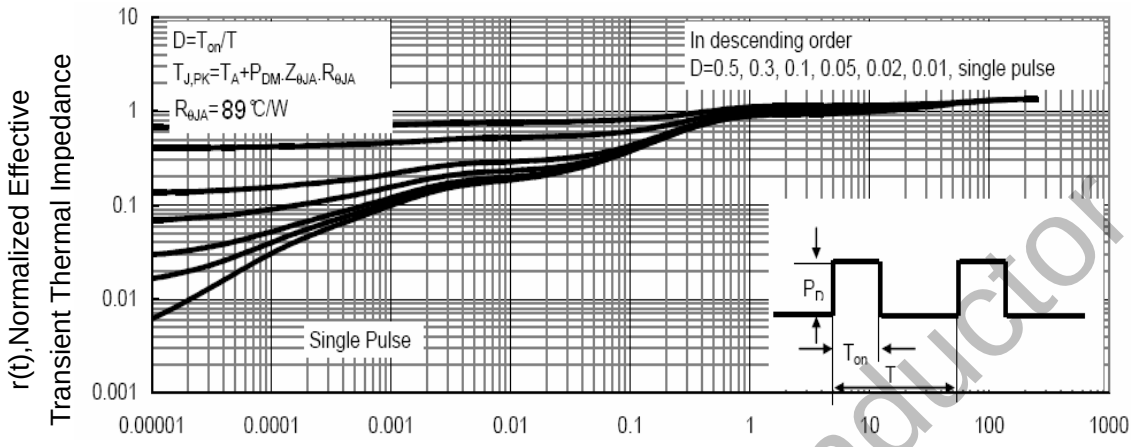

Figure 13 Normalized Maximum Transient Thermal Impedance

WildGoose Semiconductor

Test Circuit

1) $_{AS}$ test Circuit

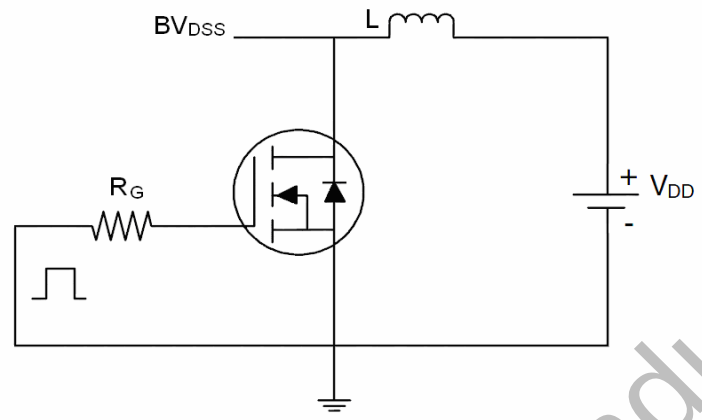

2) Gate c rge test Circuit

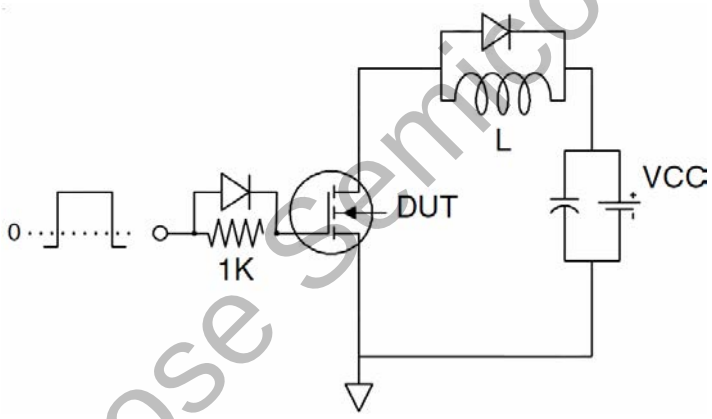

3) witch Time Test Circuit

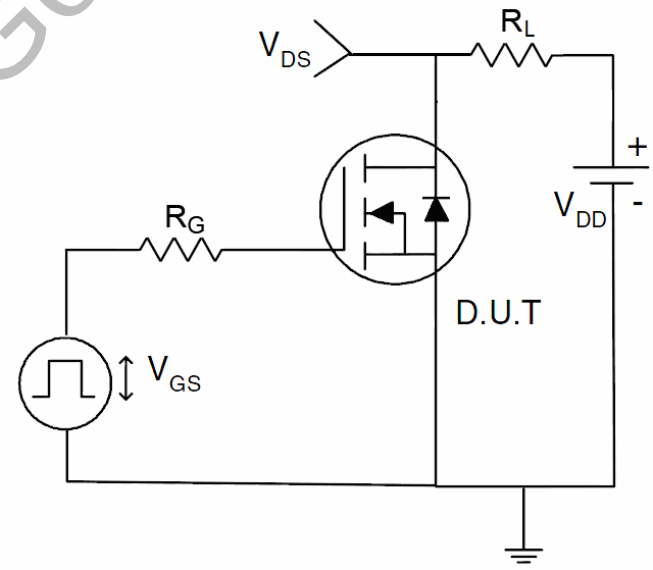

WildGoose Semiconductor

Electrical Characteristics (T_A=25℃unless otherwise noted)

Parameter	Symbol	Test Condition	Min	Typ	Max	Unit
Static characteristics						
Drain-source breakdown voltage	$V_{(BR)\ DSS}$	V_{GS} = 0V, I_D =-250μA	-30			V
Zero gate voltage drain current	I_{DSS}	V_{DS} =-24V,V_{GS} = 0V			-1	μA
Gate -source leakage current	I_{GSS}	V_{GS} =±20V, V_{DS} = 0V			±100	nA
Drain-source on-resistance (note 1)	$R_{DS(on)}$	V_{GS} =-10V, I_D =-5.8A		35	45	mΩ
		V_{GS} =-4.5V, I_D =-4A		49	65	mΩ
Forward tranconductance (note 1)	g_{FS}	V_{DS} =-5V, I_D =-4A	5.5			S
Gate threshold voltage	$V_{GS(th)}$	V_{DS} =V_{GS}, I_D =-250μA	-1	-1.7	-3	V
Diode forward voltage (note 1)	V_{SD}	I_S=-1A,V_{GS}=0V			-1	V
Dynamic characteristics (note 2)						
Input capacitance	C_{iss}	V_{DS} =-15V,V_{GS} =0V,f =1MHz		700		pF
Output capacitance	C_{oss}			120		pF
Reverse transfer capacitance	C_{rss}			75		pF
Switching characteristics (note 2)						
Turn-on delay time	$t_{d(on)}$	V_{GS}=-10V,V_{DS}=-15V, R_L=3.6Ω,R_{GEN}=3Ω		8.6		ns
Turn-on rise time	t_r			5.0		ns
Turn-off delay time	$t_{d(off)}$			28.2		ns
Turn-off fall time	t_f			13.5		ns

Notes:

1. Pulse test: Pulse width ≤300μs, Duty cycle ≤2%.
2. These parameter have no way to verify.

WildGoose Semiconductor

Typical Performance Characteristics

Output Characteristics

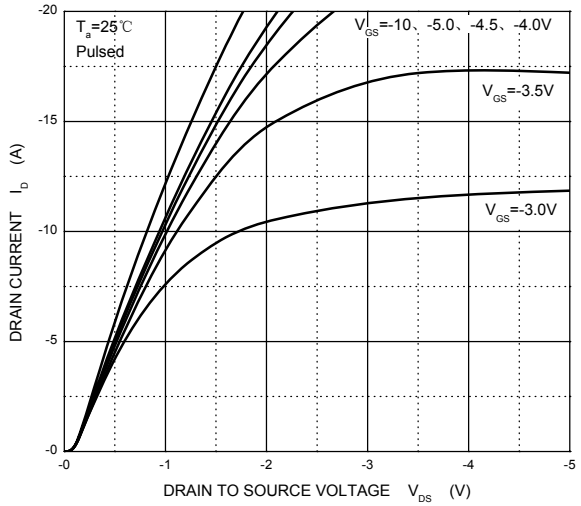

Transfer Characteristics

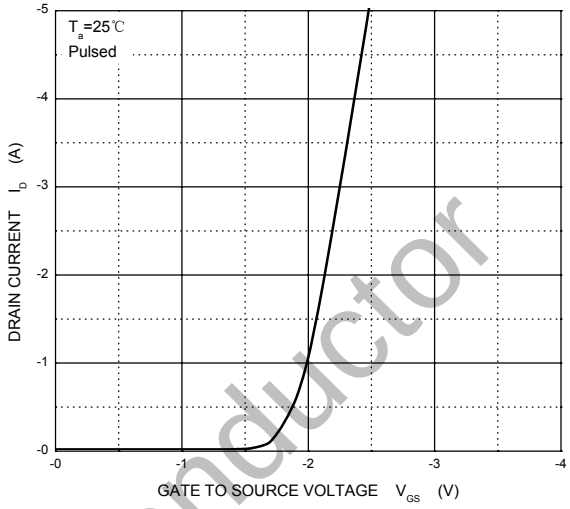

$R_{DS(ON)}$ —— I_D

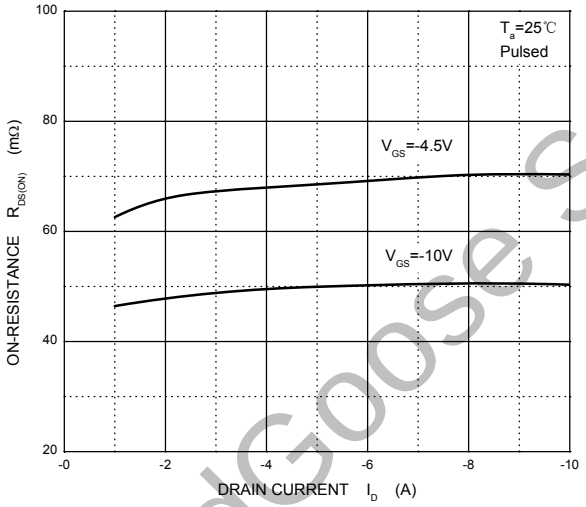

$R_{DS(ON)}$ —— V_{GS}

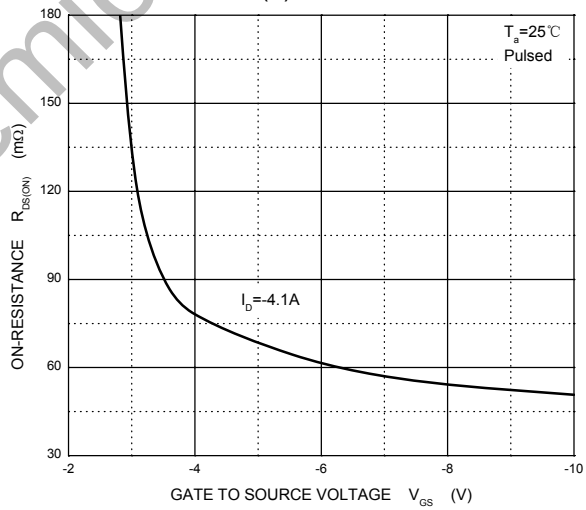

I_S —— V_{SD}

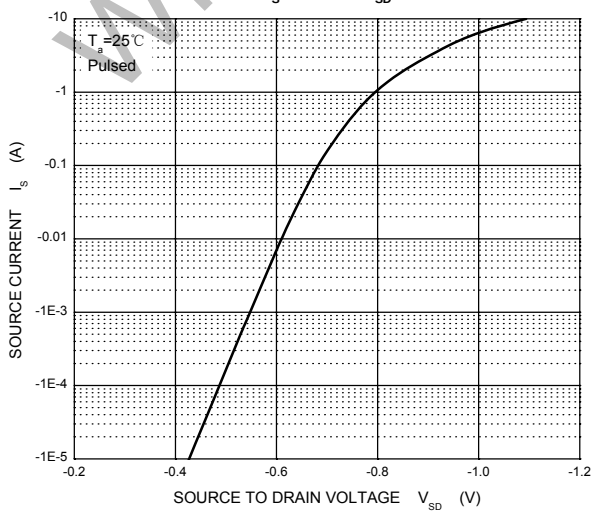

WildGoose Semiconductor

Test Circuit

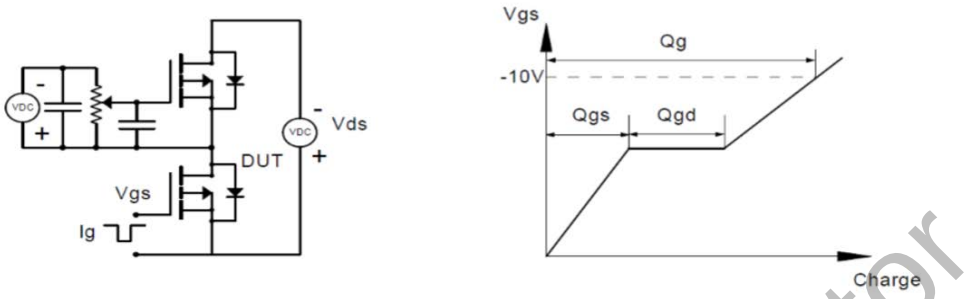

Figure 1: Gate Charge Test Circuit & Waveform

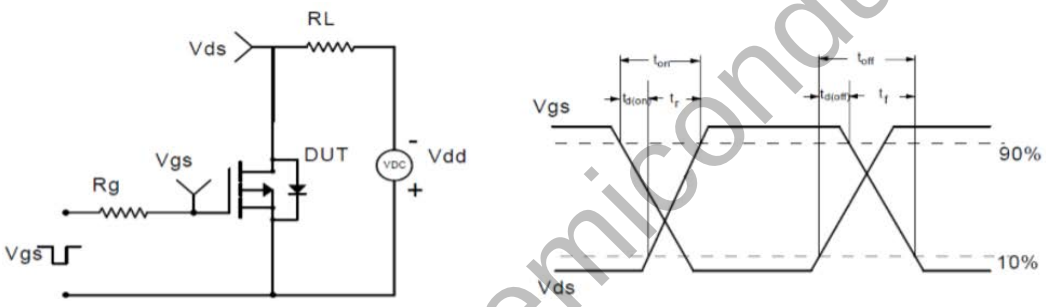

Figure 2: Resistive Switching Test Circuit & Waveform

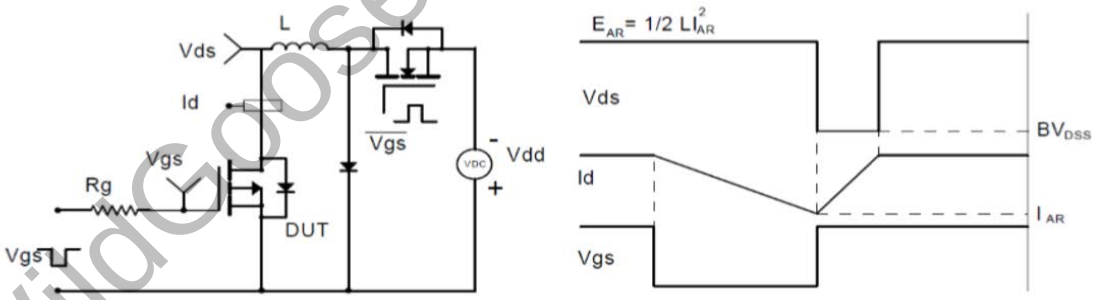

Figure 3: Unclamped Inductive Switching Test Circuit& Waveform

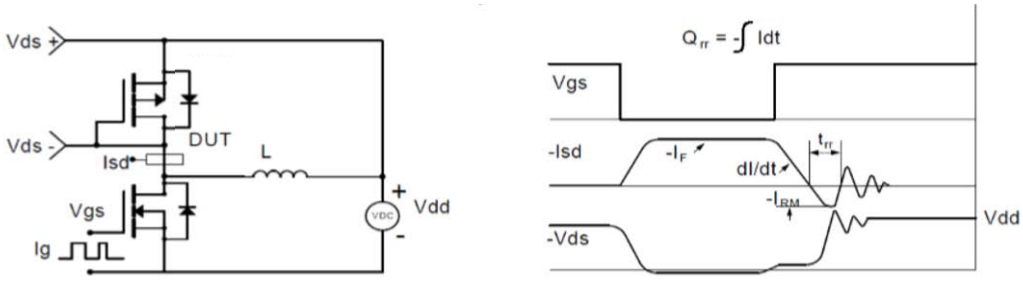

Figure 4: Diode Recovery Test Circuit & Waveform

WildGoose Semiconductor

Package Dimension

PDFN3X3

Unit: mm

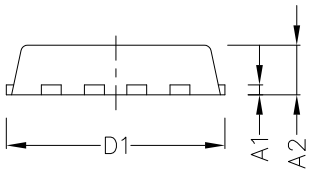

SIDE VIEW

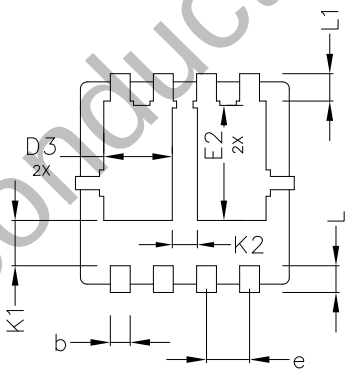

BOTTOM VIEW

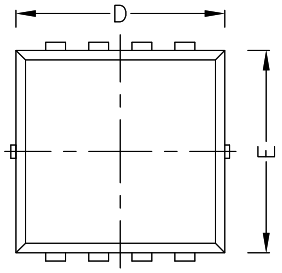

TOP VIEW

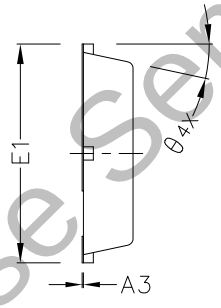

SIDE VIEW

COMMON DIMENSIONS
(UNITS OF MEASURE IS mm)

		MIN	NORMAL	MAX
	A1	0.152 BSC		
	A2	0.650	0.750	0.850
C	A3	0.005	–	0.020
	b	0.250	0.300	0.350
	D	3.050	3.150	3.250
	D1	3.200	3.300	3.400
	D2	2.350	2.450	2.550
	D3	0.935	1.035	1.135
B	E1	3.150	3.300	3.450
B	E	2.950	3.050	3.150
	E2	1.635	1.735	1.835
	e	0.650 TYPE		
	L	0.300	0.400	0.500
	θ	12° TYPE		
	K1	0.680 REF		
	K2	0.380 REF		
	L1	0.410 REF		

WildGoose Semiconductor