WGD80N10V

Features:

- ☐ Advanced Trench Technology
- ☐ Excellent Switching Characteristics.
- ☐ Extended Safe Operating Area.
- ☐ Unrivalled Gate Charge :Qg=33nC (Typ.).
- ☐ BVDSS=100V,I_D=80A
- ☐ R_{DS}(on) : 6.6mΩ (Typ.) @V_G=10V
- ☐ 100% Avalanche Tested

TO-252

RoHS COMPLIANT

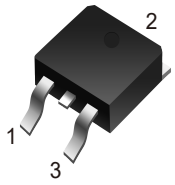

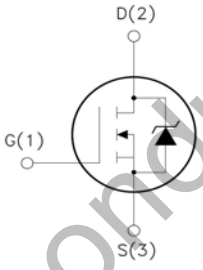

1.Gate (G)
2.Drain (D)
3.Source (S)

Absolute Maximum Ratings (@ T_C = 25°C unless otherwise specified)

Symbol	Parameter		Value	Unit
V_{DS}	Drain-to-Source Voltage		100	V
V_{GS}	Gate-to-Source Voltage		±20	V
I_D	Continuous Drain Current	T_C = 25°C	80	A
		T_C = 100°C	56	
I_{DM}	Pulsed Drain Current (1)		Refer to Fig.4	A
E_{AS}	Single Pulsed Avalanche Energy (2)		92	mJ
P_D	Power Dissipation	T_C = 25°C	101	W
		T_C = 100°C	40	
T_J, T_{STG}	Junction & Storage Temperature Range		-55 to 150	°C

Thermal Characteristics

Symbol	Parameter	Max	Unit
$R_{\theta JA}$	Thermal Resistance, Junction to Ambient(3)	39	°C/W
$R_{\theta JC}$	Thermal Resistance, Junction to Case	1.2	

WildGoose Semiconductor

Electrical Characteristics (T_J = 25°C unless otherwise specified)

Symbol	Parameter	Conditions	Min.	Typ.	Max.	Unit
Off Characteristics						
$V_{(BR)DSS}$	Drain-Source Breakdown Voltage	I_D = 250μA, V_{GS} = 0V	100	-	-	V
I_{DSS}	Zero Gate Voltage Drain Current	V_{DS} = 80V, V_{GS} = 0V	-	-	1.0	μA
I_{GSS}	Gate-Body Leakage Current	V_{DS} = 0V, V_{GS} = ±20V	-	-	±100	nA
On Characteristics						
$V_{GS(th)}$	Gate Threshold Voltage	V_{DS} = V_{GS}, I_D = 250μA	1.1	1.6	2.1	V
$R_{DS(ON)}$	Static Drain-Source ON-Resistance(4)	V_{GS} = 10V, I_D = 20A	-	6.6	8.4	mΩ
		V_{GS} = 4.5V, I_D = 15A	-	8.1	10.5	mΩ
Dynamic Characteristics						
R_g	Gate Resistance	f = 1MHz	-	2.0	-	Ω
C_{iss}	Input Capacitance	V_{GS} = 0V, V_{DS} = 50V, f = 1MHz	-	1872	-	pF
C_{oss}	Output Capacitance		-	731	-	pF
C_{rss}	Reverse Transfer Capacitance			22	-	pF
Q_g	Total Gate Charge	V_{GS} = 0 to 10V V_{DS} = 50V, I_D = 20A	-	33	-	nC
Q_{gs}	Gate Source Charge		-	6	-	nC
Q_{gd}	Gate Drain("Miller") Charge		-	7	-	nC
Switching Characteristics						
$t_{d(on)}$	Turn-On DelayTime	V_{GS} = 10V, V_{DD} = 51V I_D= 20A, R_{GEN} = 6.2Ω	-	10	-	ns
t_r	Turn-On Rise Time		-	20	-	ns
$t_{d(off)}$	Turn-Off DelayTime		-	40	-	ns
t_f	Turn-Off Fall Time		-	54	-	ns
Body Diode Characteristics						
I_S	Maximum Continuous Body Diode Forward Current		-	-	80	A
I_{SM}	Maximum Pulsed Body Diode Forward Current		-	-	319	A
V_{SD}	Body Diode Forward Voltage	V_{GS} = 0V, I_S = 20A	-		1.2	V
trr	Body Diode Reverse Recovery Time	I_F = 15A, di/dt = 100A/us	-	40	-	ns
Qrr	Body Diode Reverse Recovery Charge		-	34.9	-	nC

Notes: 1. Repetitive Rating: Pulse Width Limited by Maximum Junction Temperature.

2. E_{AS} condition: Starting T_J=25C, V_{DD}=50V, V_G=10V, R_G=25ohm, L=0.5mH, I_{AS}=19.18A, V_{DD}=0V during time in avalanche.

3. $R_{\theta JA}$ is measured with the device mounted on a 1inch^2 pad of 2oz copper FR4 PCB.

4. Pulse Test: Pulse Width≤300μs, Duty Cycle≤0.5%.

WinGoose Semiconductor

Typical Performance Characteristics

Figure 1: Power De-rating

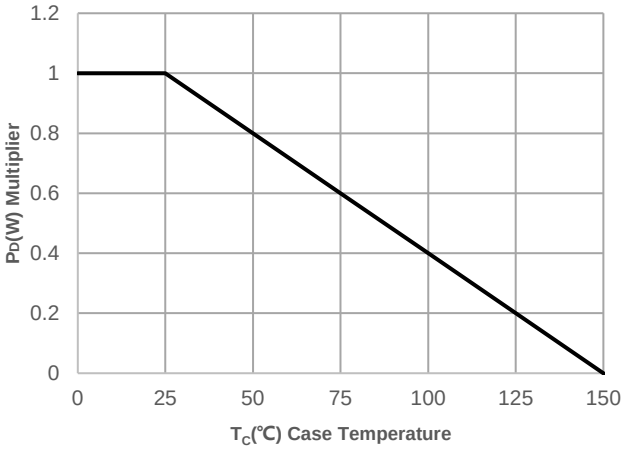

Figure 2: Current De-rating

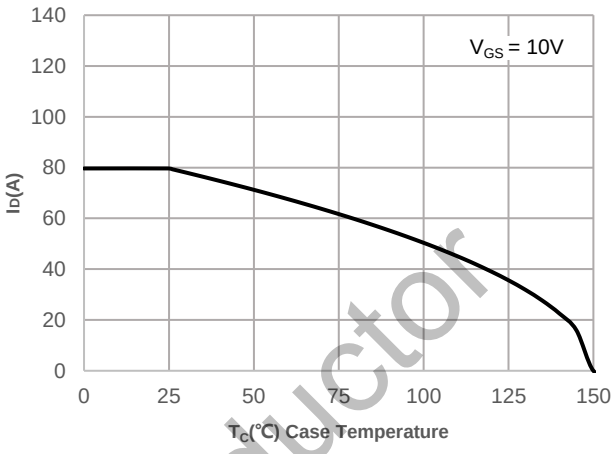

Figure 3: Normalized Maximum Transient Thermal Impedance

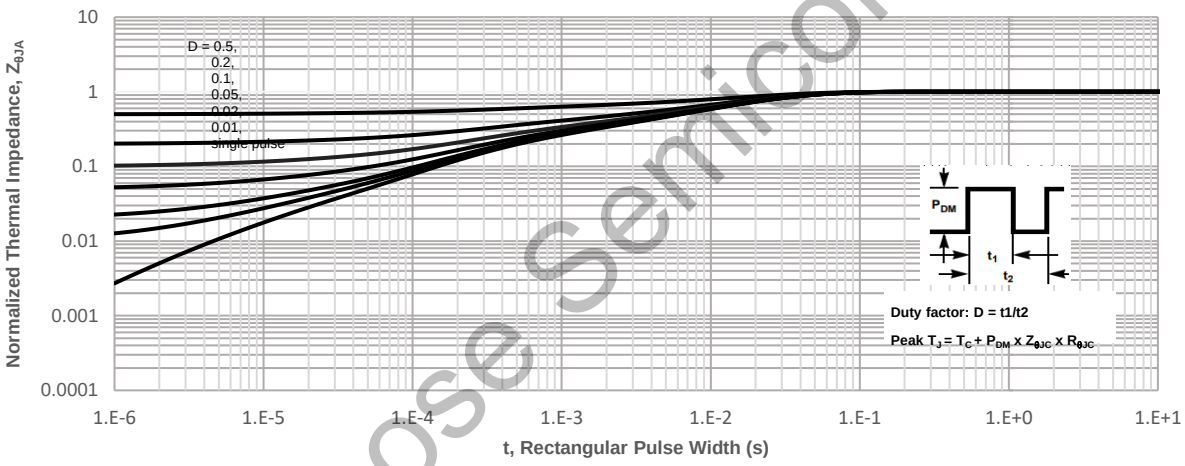

Figure 4: Peak Current Capacity

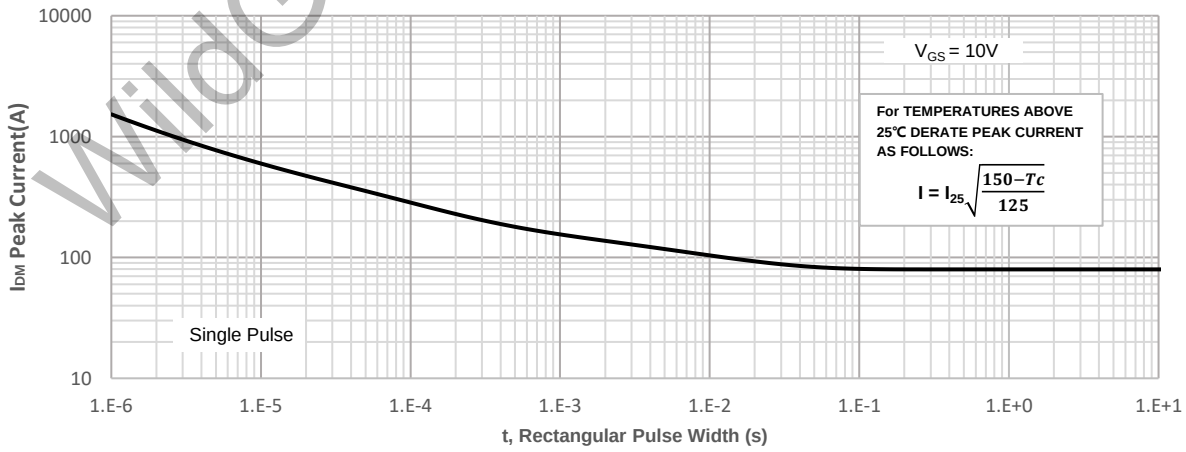

WildGoose Semiconductor

Typical Performance Characteristics

Figure 5: Output Characteristics

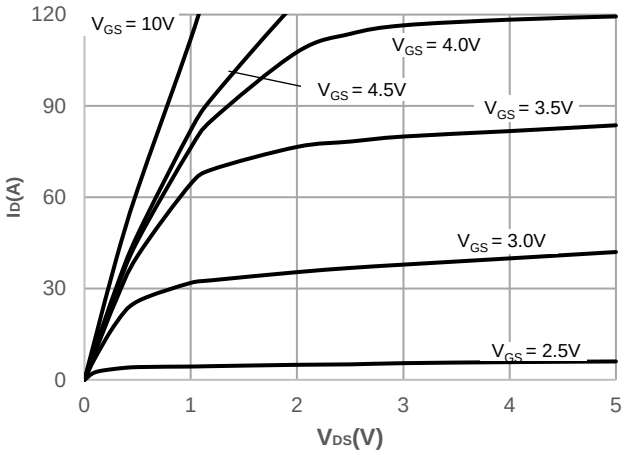

Figure 6: Typical Transfer Characteristics

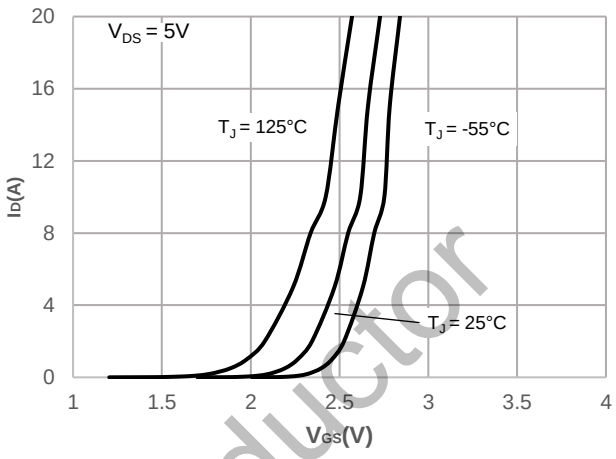

Figure 7: On-resistance vs. Drain Current

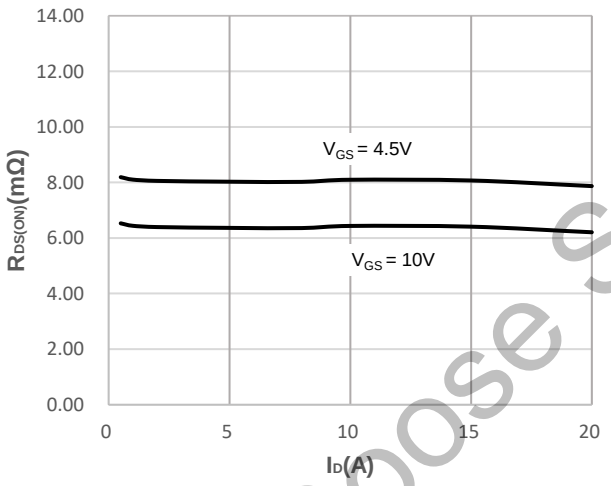

Figure 8: Body Diode Characteristics

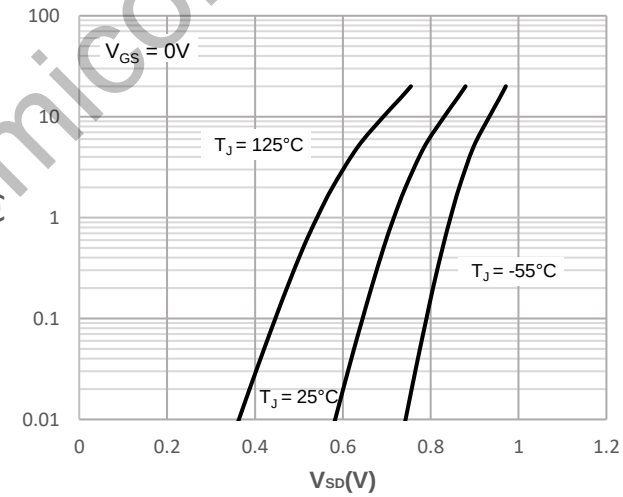

Figure 9: Gate Charge Characteristics

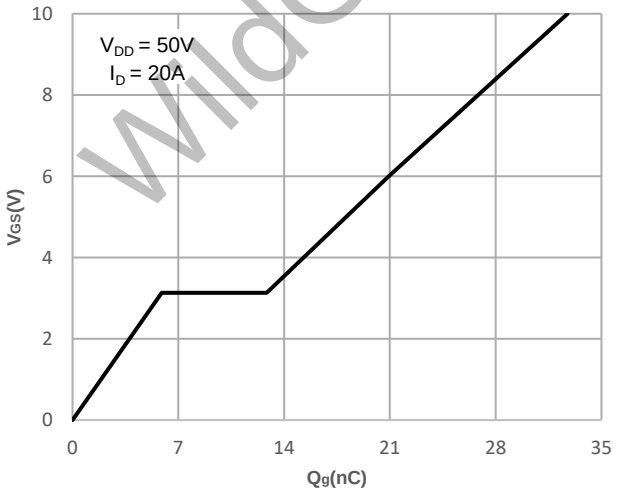

Figure 10: Capacitance Characteristics

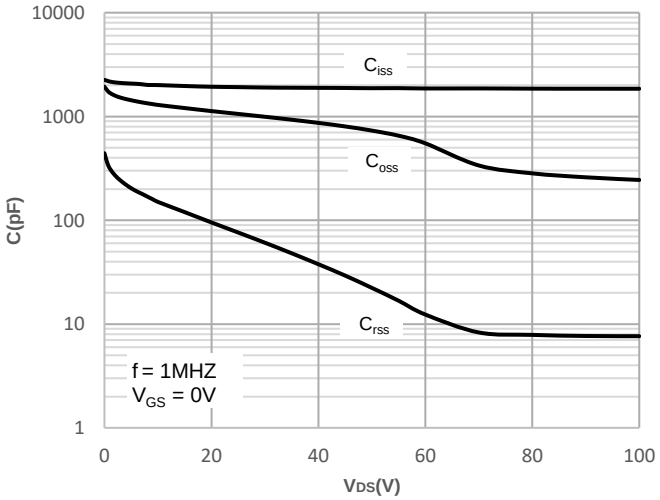

WildGoose Semiconductor

Typical Performance Characteristics

Figure 11: Normalized Breakdown voltage vs. Junction Temperature

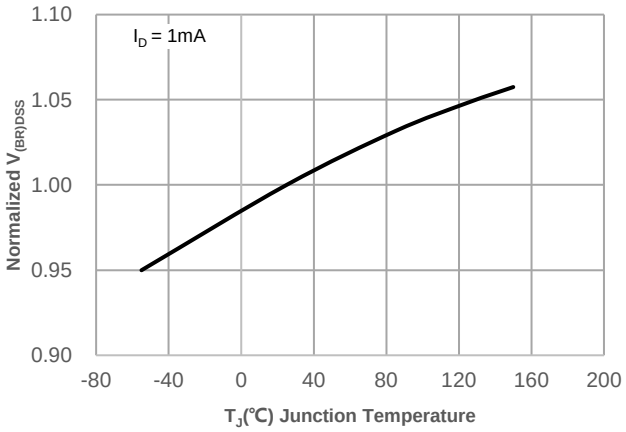

Figure 12: Normalized on Resistance vs. Junction Temperature

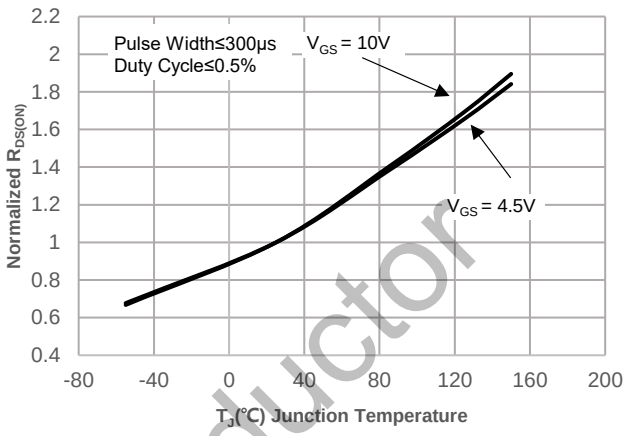

Figure 13: Normalized Threshold Voltage vs. Junction Temperature

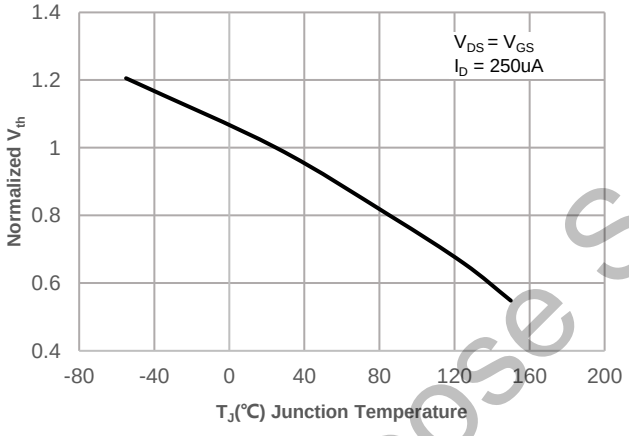

Figure 14: $R_{DS(ON)}$ vs. V_{GS}

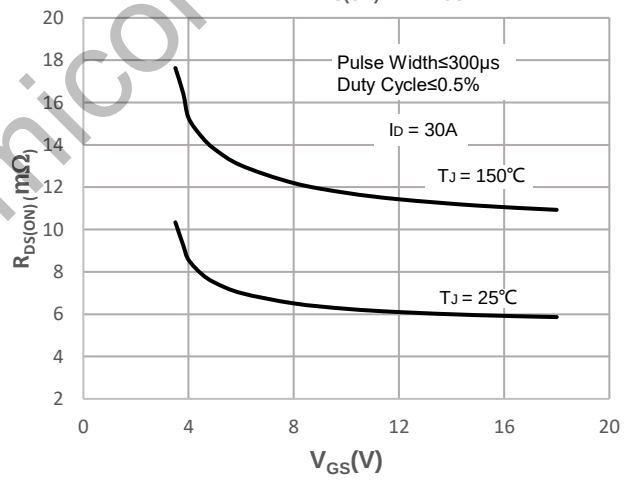

Figure 15: Maximum Safe Operating Area

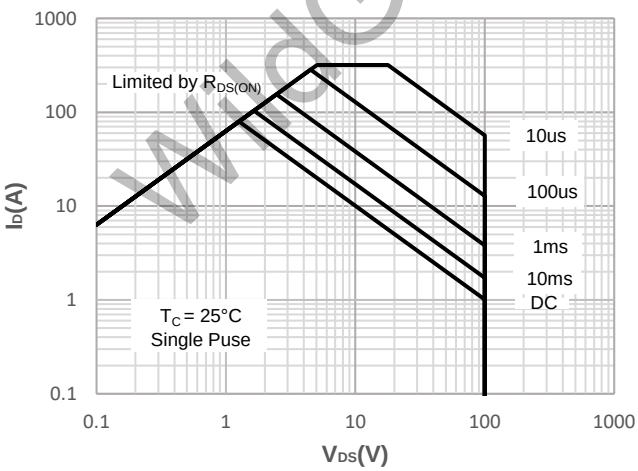

WidGoose Semiconductor

Test Circuit

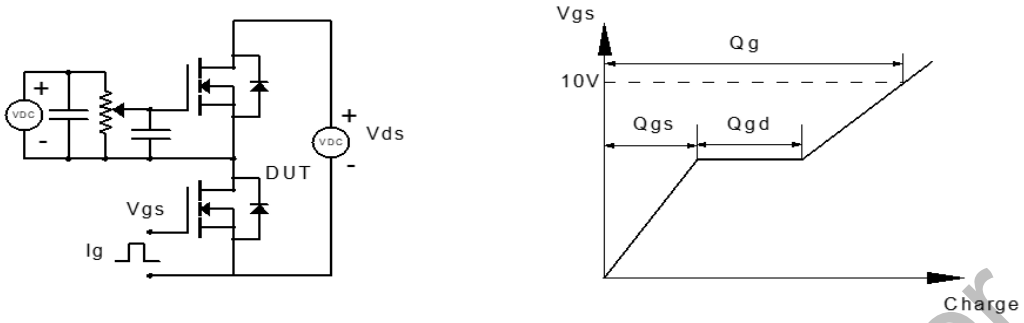

Figure 1: Gate Charge Test Circuit & Waveform

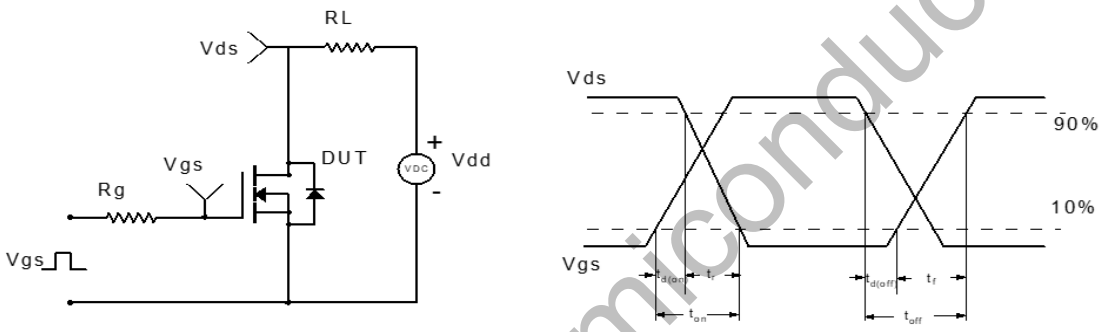

Figure 2: Resistive Switching Test Circuit & Waveform

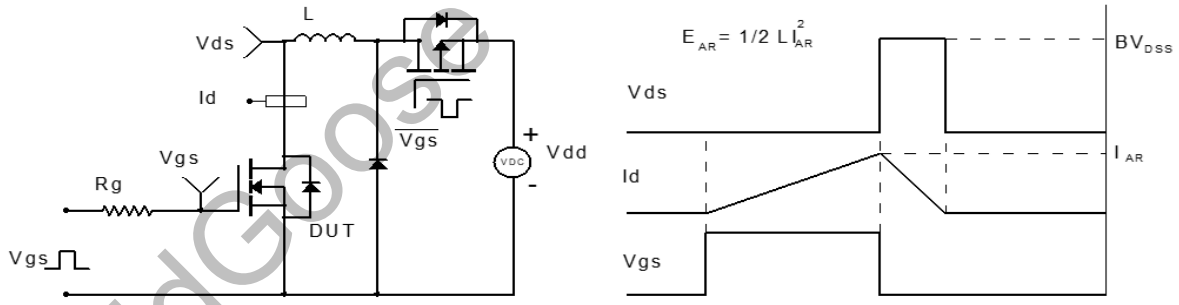

Figure 3: Unclamped Inductive Switching Test Circuit& Waveform

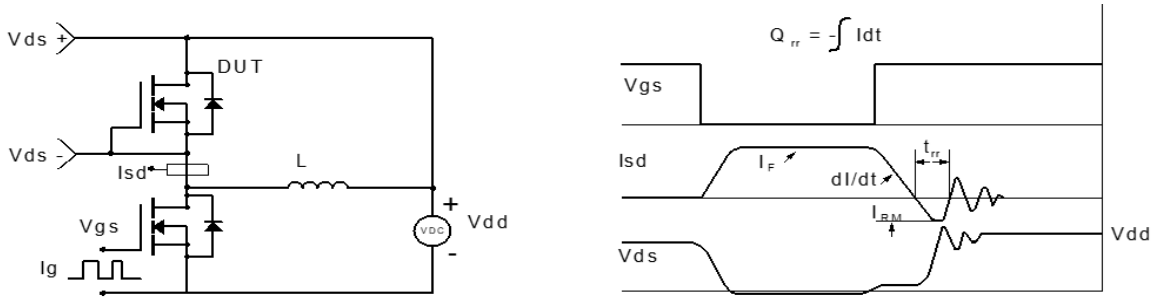

Figure 4: Diode Recovery Test Circuit & Waveform

WildGoose Semiconductor

Package Dimension

TO-252（模具一）

Unit: mm

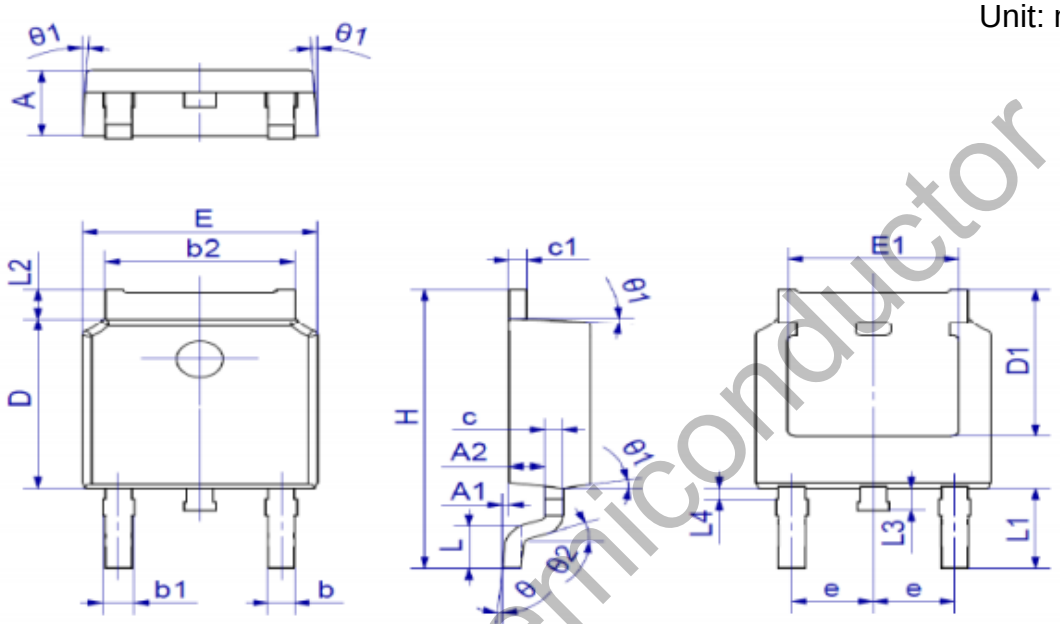

Symbol	Dimensions In Millimeters		Dimensions In Inches	
	Min.	Max.	Min.	Max.
A	2.10	2.50	0.083	0.098
A1	0	0.15	0.000	0.006
A2	0.76	1.36	0.030	0.054
b	0.61	0.85	0.024	0.033
b1	0.71	0.91	0.028	0.036
b2	5.04	5.64	0.198	0.222
c	0.508 TYP.		0.02 TYP.	
c1	0.508 TYP.		0.02 TYP.	
D	5.8	6.3	0.228	0.248
D1	5	5.6	0.197	0.220
E	6.3	6.9	0.248	0.272
E1	4.55	5.15	0.179	0.203
e	2.286 TYP.		0.09 TYP.	
H	9.65	10.4	0.380	0.409
L	1.4	1.7	0.055	0.067
L1	2.90 REF.		0.114 REF.	
L2	0.75	1.35	0.030	0.053
L3	0.6	1.2	0.024	0.047
θ	0°	10°	0°	10°
θ1	5°	9°	5°	9°
θ2	25° REF.		25° REF.	

关键尺寸									
A	A1	b	D	E	E1	e	H	D	L1

WildGoose Semiconductor

Package Dimension

TO-252（模具二）

Unit: mm

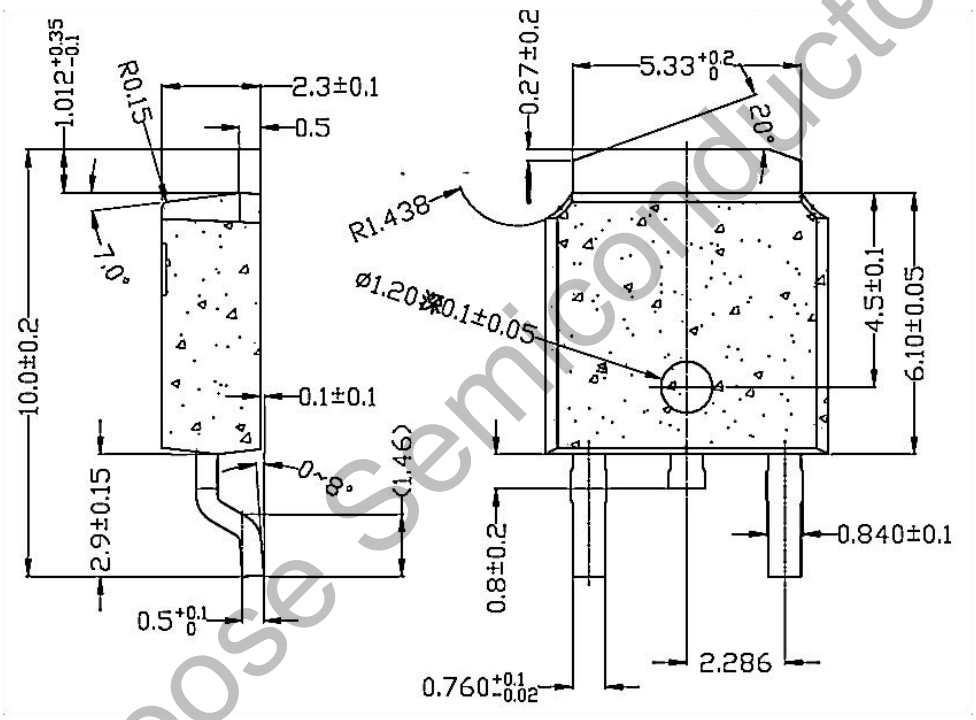

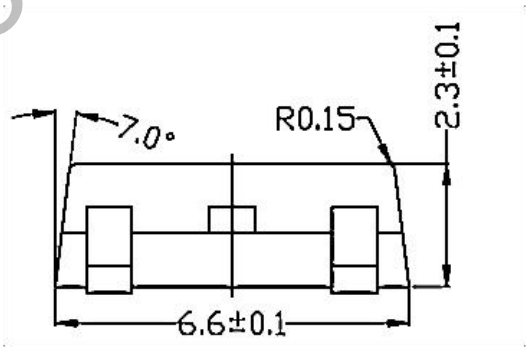

WildGoose Semiconductor