TACT SWITCHES

硕方精密電子開關

www.Sofng.com

Operation: SMT/直立式　中型　轻触开关 [柄长/操作力可定制]

Halogen Free　LEAD FREE　RoHS Compliant

LTEM NO.: TS-1102W-9526Q (Series)

(L6.0×W6.0　TACT-SWITCH)

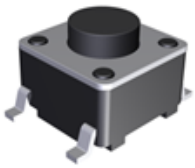

邀您使用(微信)小程序
硕方电子开关&连接器选型手册
手机扫码即可进入...

- 表面贴装 SMT
- 正向操作
- 精密部品 NICETY
- 可靠 STABILIZE
- 適合環保 RoHS

Material declaration

No.	NAME	Description
① A	拨柄	PA6T (Black)热塑性
② B	基座	PA6T (Black)热塑性
③ C	盖板	不锈钢 Q235-A
④ D	簧片	镀银&磷青铜 C5191/不锈钢 SUS304
⑤ E	嵌件	镀银&C5191R-H 磷青铜[镀锡]

Technical parameter

PROJECT \ LEVEL		A[better product]	B[average product]
Electrical Properties	Contact Rating	50mA, 24V DC	
	Initial Contact Resistance	50mΩ max.	
	Insulation Resistance	100MΩ min.500V DC　Skey/PD：100MΩ min.300V DC	
	Withstand Voltage	500V AC for 1 minute	350 V AC for 1 minut
Durable Performance	There No Load	115,000 Cycles	100,000 Cycles
	Rated Load	100,000 Cycles	850,000 Cycles
Sterage temp.		-40℃～+85℃(Operating Temp:)	
Operating Force		1.6 / 2.6N.(1N.=100gram-force)	
Heat Rrsistance		IR Reflow:255℃,5sec.　Manual:350℃,3sec.	

CIRCUIT DIAGRAM

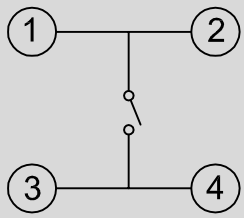

Unit:mm

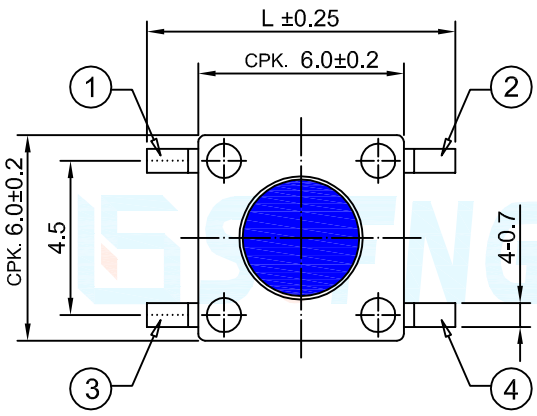

P.C.B LAYOUT

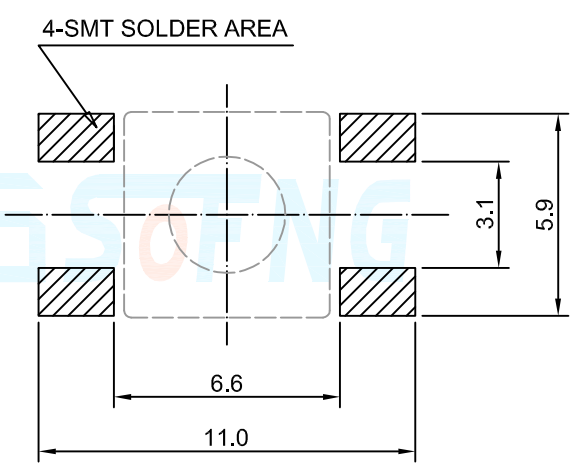

DECIMALS	ANGLES
.X :±0.20	X.° :±1.5°
.XX :±0.10	X.X° :±1.0°
.XXX :±0.05	.XXX° :±0.5°

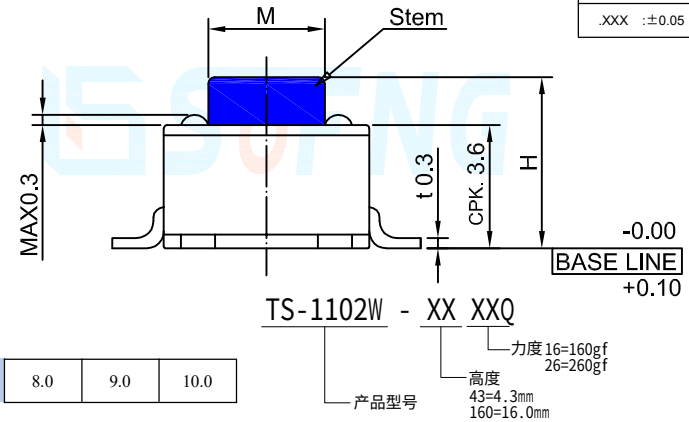

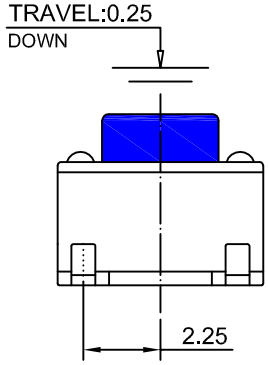

H	M
4.3	3.5
5.0	3.5
5.5	3.5
6.0	3.4
6.5	3.4
7.0	3.4
~9.5	3.3
10.0	3.3
~16.0	3.0

L	8.0	9.0	10.0