TACT SWITCH

硕方精密電子開關

www.Sofng.com

Operation: SMT/贴片直立式　中型　轻触开关　[柄长/操作力可定制]

LTEM NO.: TS-1157P-3126Q (Series)

(L6.20mm×W6.20mm　TACT-SWITCH)

表面贴装 SMT

正向操作 DOWN

精密部品 NICETY

可靠 STABILIZE

適合環保 RoHS

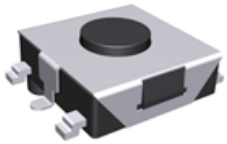

邀您使用(微信)小程序

硕方电子开关&连接器选型手册

手机扫码即可进入...

Material declaration

No.	NAME	Description
① A	拨柄	PA6T (Black)热塑性
② B	基座	PA6T (Black)热塑性
③ C	盖板	不锈钢 Q235-A
④ D	簧片	镀银&磷青铜 C5191/不锈钢
⑤ E	嵌件	镀银&黄铜

Technical parameter

PROJECT \ LEVEL		A[better product]	B[average product]
Electrical Properties	Contact Rating	100mA, 12V DC	
	Initial Contact Resistance	50mΩ max.	
	Insulation Resistance	100MΩ min.500V DC	Skey/PD：100MΩ min.300V DC
	Withstand Voltage	300V AC for 1 minute	250 V AC for 1 minut
Durable Performance	There No Load	120,000 Cycles	100,000 Cycles
	Rated Load	100,000 Cycles	85,000 Cycles
Sterage temp.		-35℃～+75℃(Operating Temp:)	
Operating Force		1.6 / 2.6N. (1N.=100gram-force)	
Heat Rrsistance		IR Reflow:255℃,5sec. Manual:350℃,3sec.	

CIRCUIT DIAGRAM

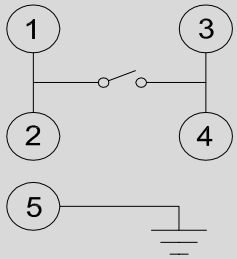

Unit:mm

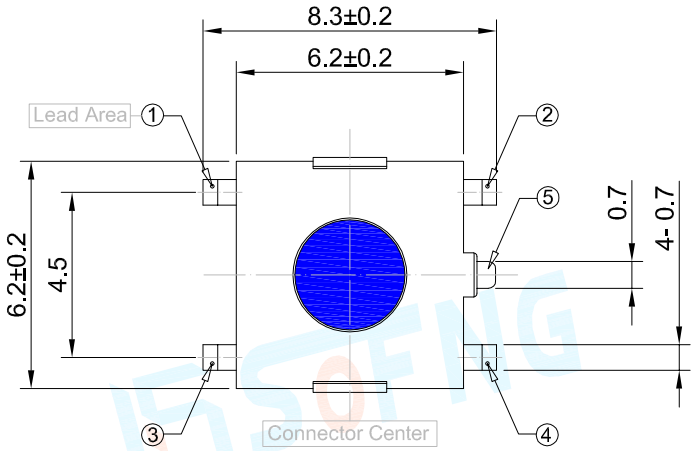

TS-1157P - XX XXQ

- 产品型号
- 高度 25=2.5mm 43=4.3mm
- 力度 16=160gf 26=260gf

P.C.B LAYOUT

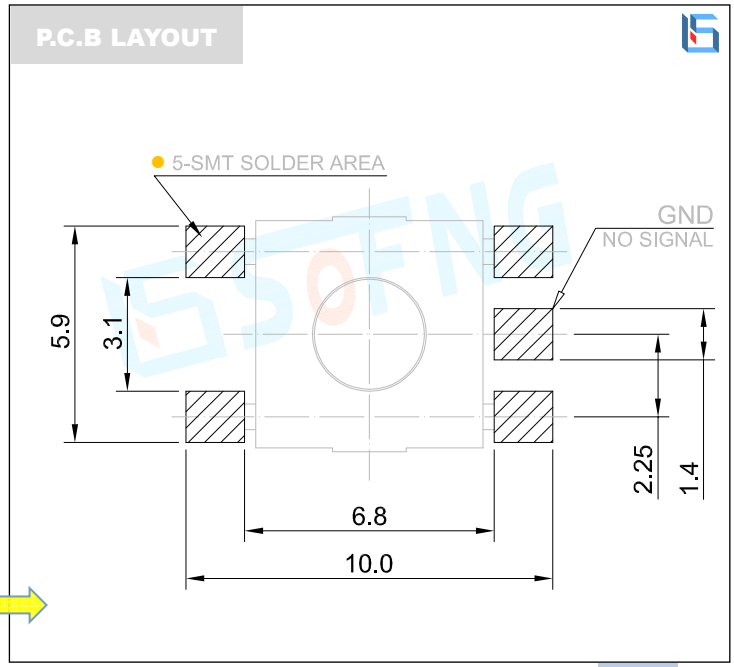

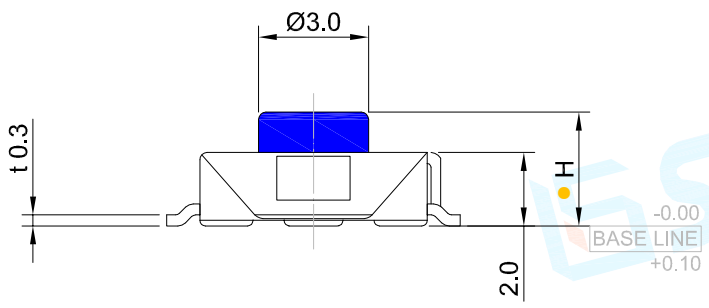

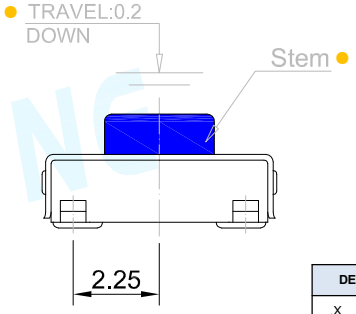

H
2.5
2.7
3.1
3.5
3.7
4.3

DECIMALS		ANGLES	
.X	:±0.20	X.°	:±1.5°
.XX	:±0.10	X.X°	:±1.0°
.XXX	:±0.05	.XXX°	:±0.5°