SWITCHES TACT

Operation: 微型 4PIN 包脚 & 立贴式 轻触开关

RoHS Compliant

ITEM NO.: TS-1808A-26Q (Series)

(L4.2×W3.2×H2.5mm TACT-SWITCH)



- 表面贴装 SMT
- 正向操作
- 精密部品 NICETY
- 可靠 STABILIZE
- 適合環保 RoHS

Material declaration

No.	NAME	Description
① A	拨柄	LCP (Black)热塑性
② B	上盖	SUS-304 不锈钢
③ C	基座	LCP (Black)热塑性
④ D	簧片	镀银&磷青铜 C5191/不锈钢 SUS304
⑤ E	嵌件	镀银&C5191R-H 磷青铜[镀锡]

Technical parameter

PROJECT \ LEVEL		A[better product]	B[average product]
Electrical Properties	Contact Rating	0.25A, 24V DC	
	Initial Contact Resistance	50mΩ max.	
	Insulation Resistance	100MΩ min.500V DC Skey/PD：100MΩ min.300V DC	
	Withstand Voltage	500V AC for 1 minute	350 V AC for 1 minut
Durable Performance	There No Load	115,000 Cycles	100,000 Cycles
	Rated Load	100,000 Cycles	850,000 Cycles
Sterage temp.		-40℃～+85℃(Operating Temp:)	
Operating Force		1.6 /●2.6N.(1N.=100gram-force)	
Heat Rrsistance		IR Reflow:255℃,5sec. Manual:350℃,3sec.	

CIRCUIT DIAGRAM

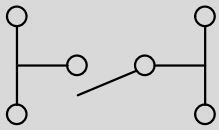

Unit:mm

DECIMALS	ANGLES
.X :±0.20	X.° :±1.5°
.XX :±0.10	X.X° :±1.0°
.XXX :±0.05	.XXX° :±0.5°

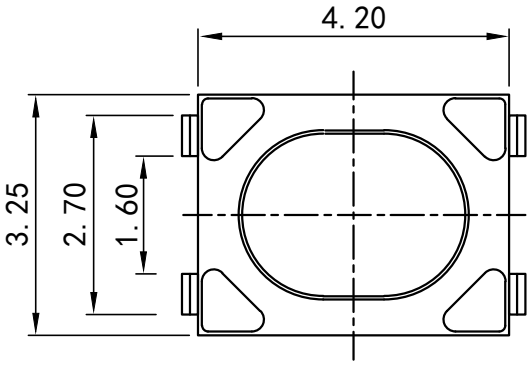

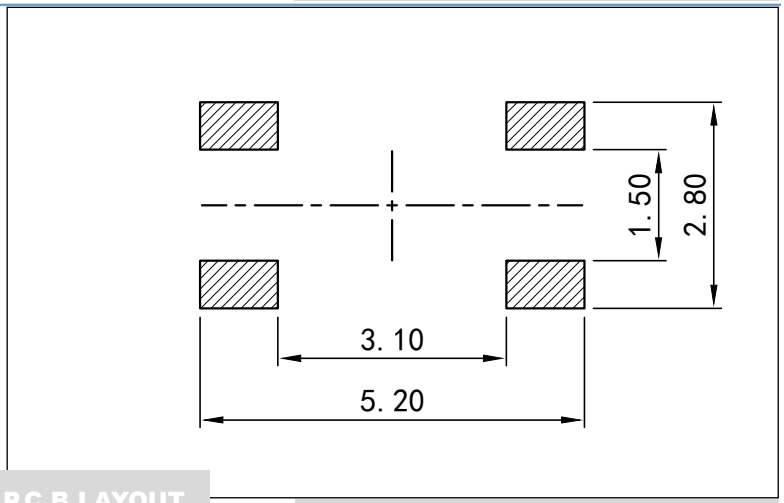

P.C.B LAYOUT

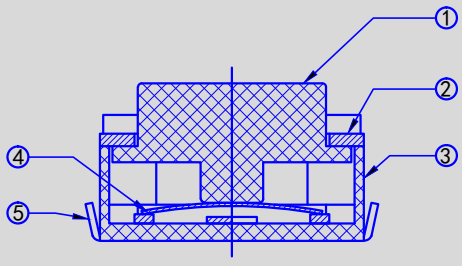

TS-1806A- XXQ
力度 16=160gf 26=260gf
产品型号

