ROHS Compliant

MAPX	MODIFICATION	DATE	DRAW	APPROVE

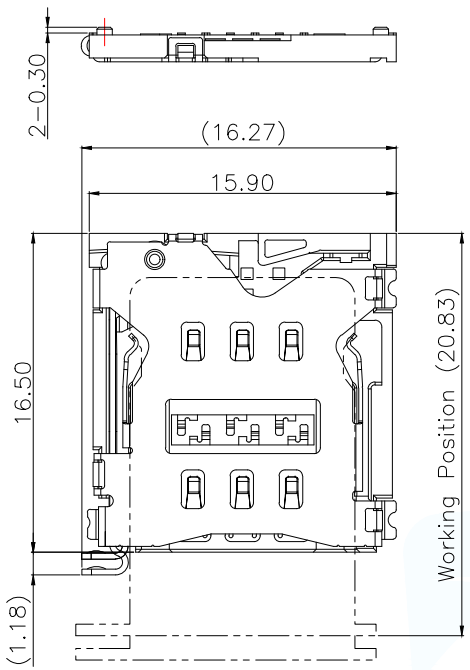

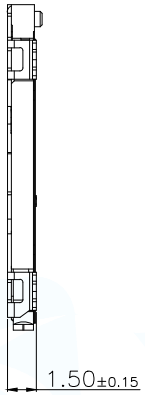

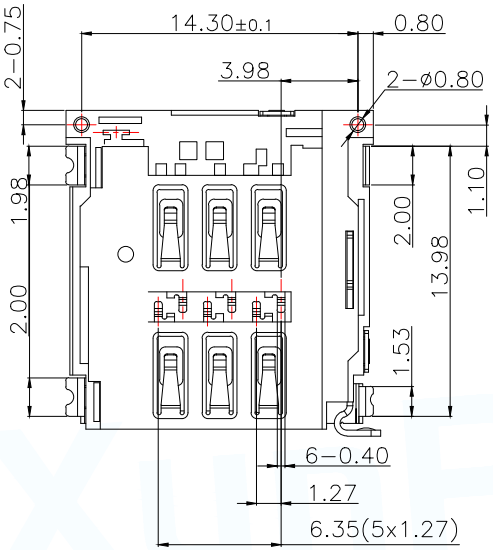

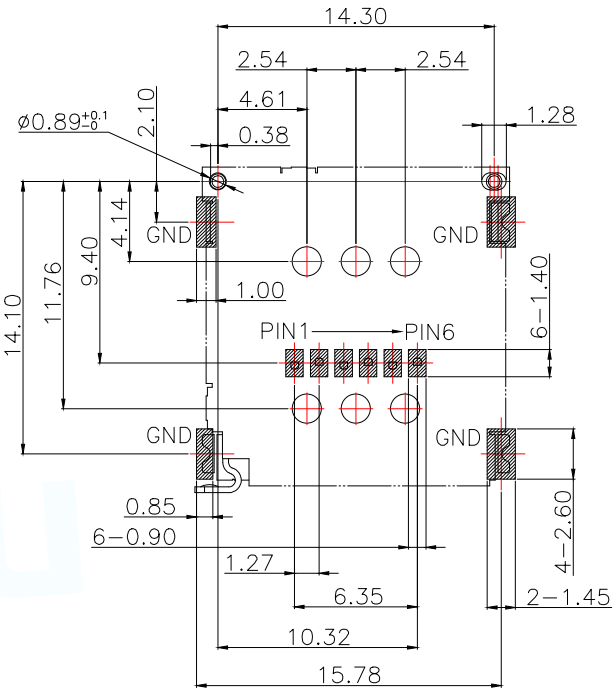

Recommended PCB Layout

Tolerance: ±0.05

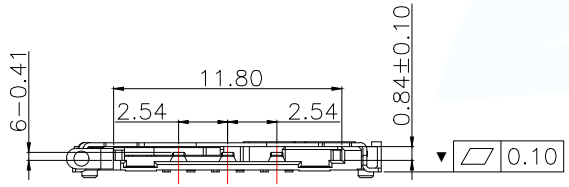

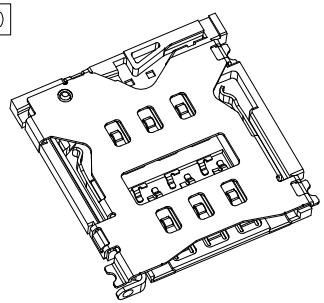

PIN 1#	C1: VCC
PIN 2#	C5: Grand
PIN 3#	C2: Reset
PIN 4#	C6: VPP
PIN 5#	C3: Clock
PIN 6#	C7: I/O

NOTE:

⚠ MATERIAL & FINISH SEE TABLE;

2. CHARACTERISTIC:

2-1.CURRENT RATING :1A MAX.

2-2.CONTACT RESISTANCE:50MOHMS MAX

2-3.INSULATION RESISTANCE:100MOHMS MIN./500VDC

2-4.DIELECTRIC WITHSTANDING VOLTAGE:500VAC/1MINUTE

2-5.MATING FORCE: 10N MAX, WITHDRAWAL FORCE: 1N MIN.;

2-6.DURABILITY: 1500 CYCLES

2-7.OPERATING TEMPERATURE:-40°C TO+85°C

Item	Part Name	Material	Description
5	Shell	Stainless Steel	Nickel Under Plated Overall.
4	Lever	Stainless Steel	/
3	Cam	Stainless Steel	/
2	Housing	Thermoplastics	Black,UL94V-0
1	Terminal	Copper Alloy	Gold Flash on Solder Tails and Contact Area; Nickel Under Plated Overall.

MANUFACTURE DWG

东莞市讯普电子科技有限公司
DongGuan XunPu Electronics Co,Ltd

UNLESS OTHERWISE SPECIFED TOLERANCES

DECIMALS:	ANGLES:
X.:±0.50	X.°:±5°
X.X:±0.30	X.X°:±3°
X.XX:±0.15	X.XX°:±1°

CUSTOMER COPY

TITLE:1.5H Nano SIM Card CONN With Lever

PAR	SMN-327-ACP6	
DWN	Lucas	
CHKD	Ethan	
APVD	Jacob	
SCALE1:1	UNIT:MM	
SIZE:A4	SHEET:1F1	REV:A