ROHS Compliant

MAPX	MODIFICATION	DATE	DRAW	APPROVE

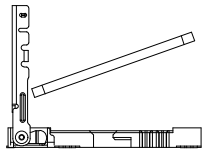
STEP 1 INSERT NANO SIM CARD

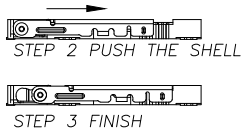

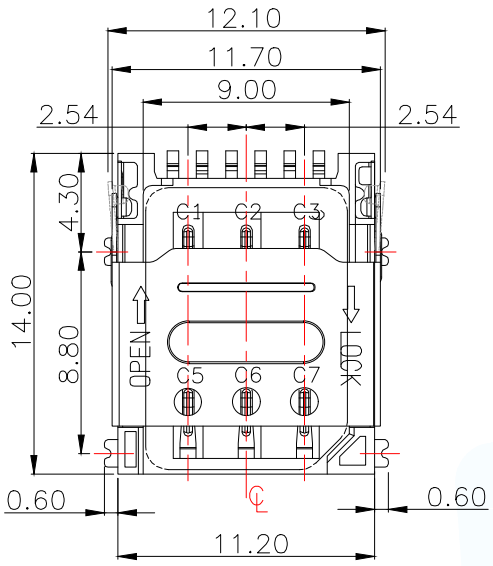

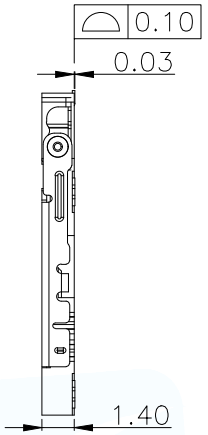

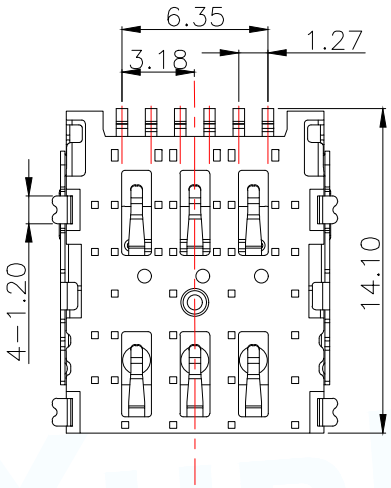

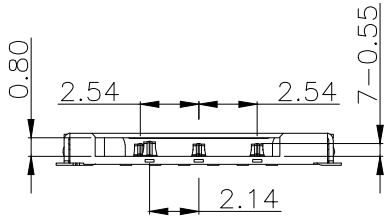

NANO SIM CARD	
Pin No.	NAME
C1	VCC OF SIM
C2	RST OF SIM
C3	CLK OF SIM
C5	GND OF SIM
C6	VPP OF SIM
C7	I/O OF SIM
C4/C8	N/A

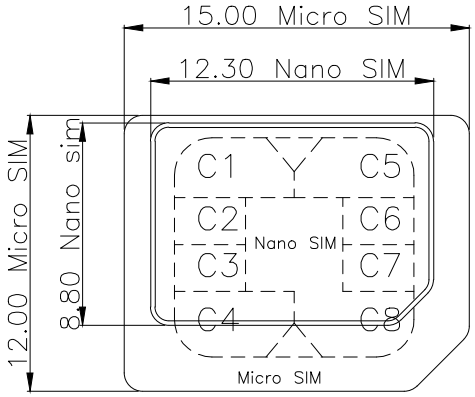

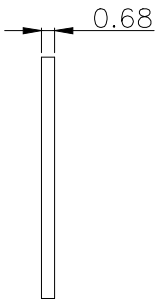

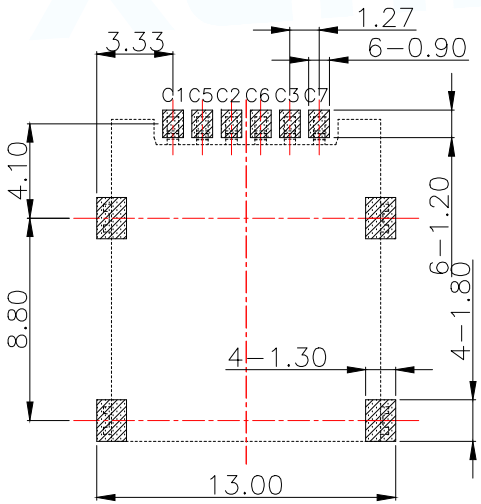

PAD AREA

KEEP OUT AREA

RECOMMENDED PCB LAYOUT

GENERAL TOLERANCE ±0.05

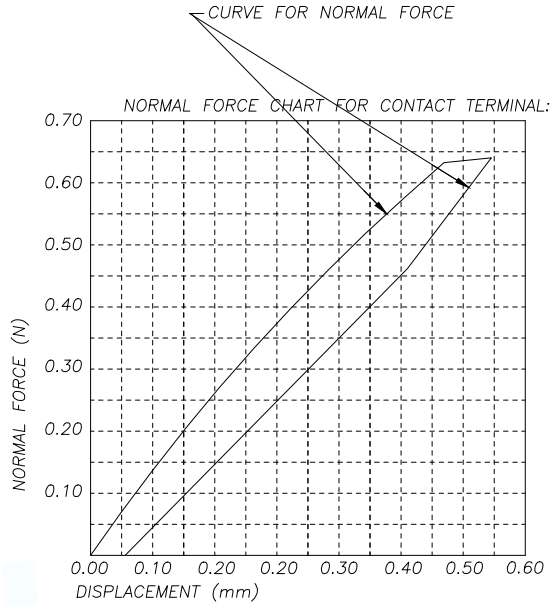

NOTES:

1.MATERIAL:
- 1.1 Housing:High Temperature Thermoplastic UL94V-0; Color Black.
- 1.2 Terminal:Copper Alloy,T=0.12mm.
- 1.3 Shell:Stainless Steel,T=0.20mm.

2.FINISH:
- 2.1 Terminal:Plated Gold on The Contact Area and Solder Tails
- 2.2 Peg:Plated Gold on the bottom of the Solder Tails, Tin Plated over all.

3.SPECIALITY:
- 3.1 Rated current:0.5A
- 3.2 Rated voltage:50V
- 3.3 Contact Resistance:80mΩMAX
- 3.4 Insulation Resistance:100MΩMIN 100V DC
- 3.5 Dielectric withstanding voltage: 100V AC.
- 3.6 Solder ability:245±5°C,5±0.5s.
- 3.7 Operating condition:Temperature: -40°C~+85°C Humidity: 80% R.H MAX

NO.	PART NAME	Q'TY	DESCRIPTION	NOTE
③	TERMINAL	6	C5210-EH,T=0.12	G/F PLATING
②	BASE INSULATOR	1	LCP+GF30%	BLACK
①	SHELL	1	SUS304-H,T=0.15	AU/Ni PLATING

MANUFACTURE DWG

东莞市讯普电子科技有限公司
DongGuan XunPu Electronics Co,Ltd

UNLESS OTHERWISE SPECIFED TOLERANCES

DECIMALS:	ANGLES:
X.:±0.50	X.°:±2°
X.X:±0.20	X.X°:±1°
X.XX:±0.10	

TITLE:6PIN 1.4H HINGE NANO SIM CARD CONN.

PAR	SMN-305-ARP6	
DWN		
CHKD		
APVD		
SCALE1:1	UNIT:MM	
CUSTOMER COPY	SIZE:A4	SHEET:1F1 REV:A

ROHS Compliant

MAPX	MODIFICATION	DATE	DRAW	APPROVE

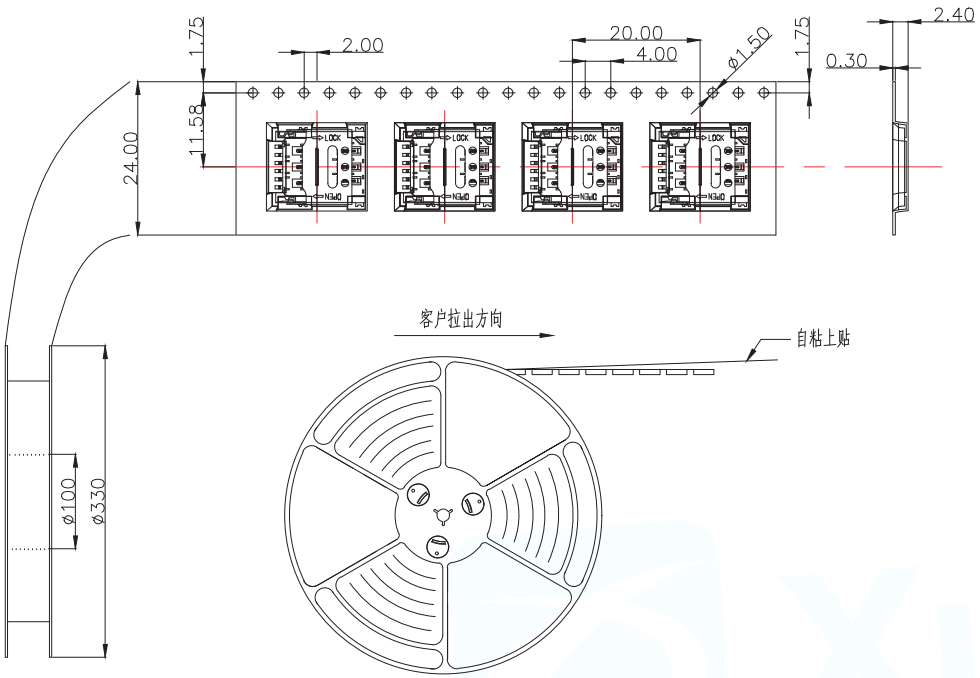

NOTES

1. NUMBER OF CONNECTORS:1500PCS/REEL
2. LEAD TAPE LENGTH

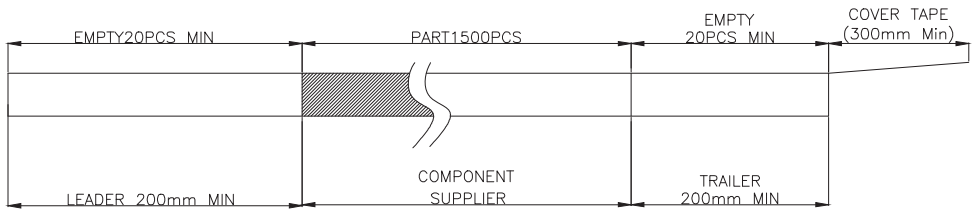

3.QUANTITY:15000PCS/CARTON

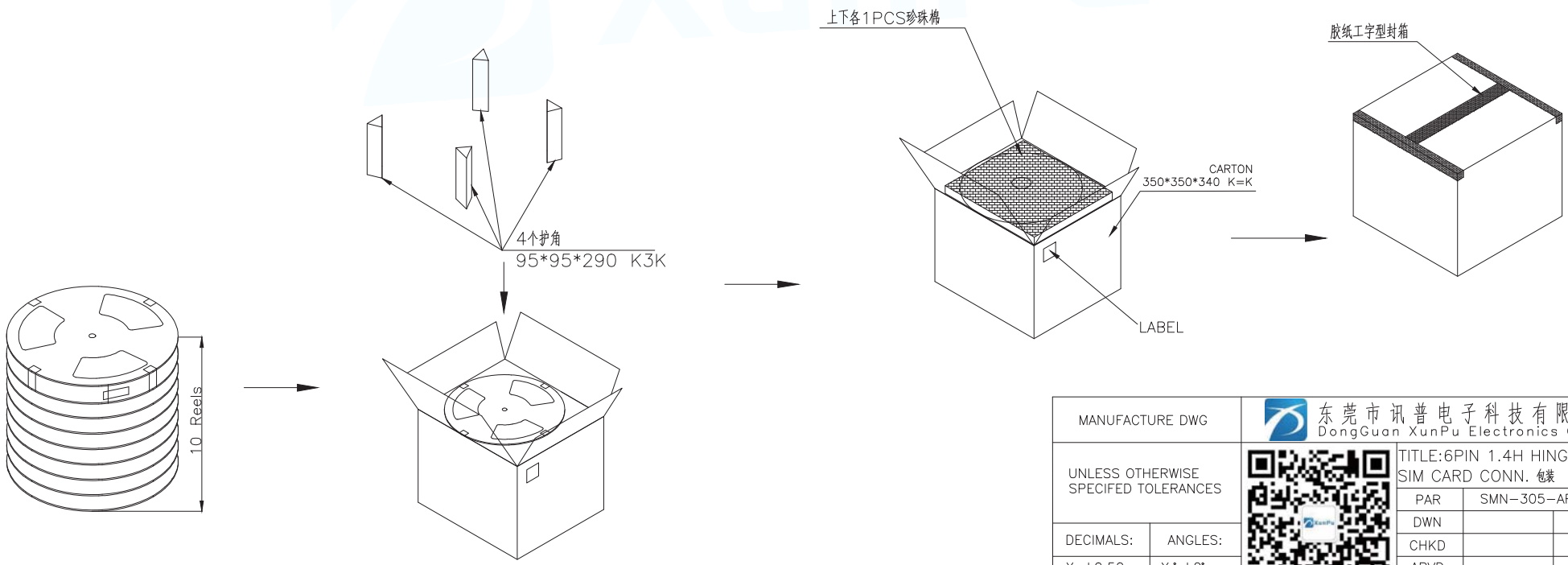

MANUFACTURE DWG		东莞市讯普电子科技有限公司 DongGuan XunPu Electronics Co,Ltd	
UNLESS OTHERWISE SPECIFED TOLERANCES			TITLE:6PIN 1.4H HINGE NANO SIM CARD CONN. 包装
DECIMALS:	ANGLES:		PAR: SMN-305-ARP6
X.:±0.50	X.°:±2°		DWN:
X.X:±0.20	X.X°:±1°		CHKD:
X.XX:±0.10		CUSTOMER COPY	APVD:
			SCALE1:1 / UNIT:MM / SIZE:A4 / SHEET:1F1 / REV:A