WG2P04

SOT-23

RoHS COMPLIANT

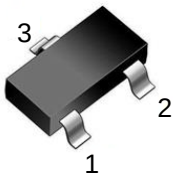

Features:

- ☐ V_{DS}= -40V, I_D= -2A
  $R_{DS(ON)}$ < 198mΩ @ V_{GS} = -10V
  $R_{DS(ON)}$ < 248 mΩ @ V_{GS} = -4.5V
- ☐ Advanced Trench Technology
- ☐ Excellent $R_{DS(ON)}$ and Low Gate Charge
- ☐ Lead Free

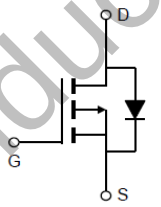

1.Gate (G)
2.Drain (D)
3.Source (S)

Absolute Maximum Ratings (T_A=25℃ unless otherwise specified)

Symbol	Parameter		Max.	Units
V_{DSS}	Drain-Source Voltage		-40	V
V_{GSS}	Gate-Source Voltage		±20	V
I_D	Continuous Drain Current	T_A= 25℃	-2	A
		T_A= 100℃	-0.8	A
I_{DM}	Pulsed Drain Current note1		-10	A
P_D	Power Dissipation	T_A= 25℃	0.83	W
$R_{\theta JA}$	Thermal Resistance, Junction to Ambient		150	℃/W
T_J, T_{STG}	Operating and Storage Temperature Range		-55 to +150	℃

WildGoose Semiconductor

Electrical Characteristics (T_J=25℃ unless otherwise specified)

Symbol	Parameter	Test Condition	Min.	Typ.	Max.	Units
Off Characteristics						
$V_{(BR)DSS}$	Drain-Source Breakdown Voltage	V_{GS}=0V, I_D= -250μA	-40	-	-	V
I_{DSS}	Zero Gate Voltage Drain Current	V_{DS}= -40V, V_{GS}=0V	-	-	-1	μA
I_{GSS}	Gate to Body Leakage Current	V_{DS}=0V, V_{GS}= ±20V	-	-	±100	nA
On Characteristics						
$V_{GS(th)}$	Gate Threshold Voltage	V_{DS}=V_{GS}, I_D= -250μA	-1.0	-1.4	-2.5	V
$R_{DS(on)}$	Static Drain-Source on-Resistance note3	V_{GS}= -10V, I_D= -1A	-	135	198	mΩ
		V_{GS}= -4.5V, I_D= -1A	-	170	248	
Dynamic Characteristics						
C_{iss}	Input Capacitance	V_{DS}= -20V, V_{GS}=0V, f=1.0MHz	-	320	-	pF
C_{oss}	Output Capacitance		-	44	-	pF
C_{rss}	Reverse Transfer Capacitance		-	38	-	pF
Q_g	Total Gate Charge	V_{DD}= -20V, I_D= -2A, V_{GS}= -10V	-	10	-	nC
Q_{gs}	Gate-Source Charge		-	2	-	nC
Q_{gd}	Gate-Drain(“Miller”) Charge		-	1.6	-	nC
Switching Characteristics						
$t_{d(on)}$	Turn-on Delay Time	V_{DD}= -20V, I_D= -2A, V_{GS}= -10V, R_{GEN}=2.4Ω	-	7	-	ns
t_r	Turn-on Rise Time		-	19	-	ns
$t_{d(off)}$	Turn-off Delay Time		-	16	-	ns
t_f	Turn-off Fall Time		-	24	-	ns
Drain-Source Diode Characteristics and Maximum Ratings						
I_S	Maximum Continuous Drain to Source Diode Forward Current		-	-	-2	A
I_{SM}	Maximum Pulsed Drain to Source Diode Forward Current		-	-	-20	A
V_{SD}	Drain to Source Diode Forward Voltage	V_{GS}=0V, I_S= -2A	-	-	-1.2	V
trr	Reverse Recovery Time	I_F= -2A, di/dt=100A/μs	-	11	-	ns
Qrr	Reverse Recovery Charge		-	6	-	nC

Notes:1. Repetitive Rating: Pulse Width Limited by Maximum Junction Temperature

2. Pulse Test: Pulse Width≤300μs, Duty Cycle≤2%

WildGoose Semiconductor

Typical Performance Characteristics

Figure 1: Output Characteristics

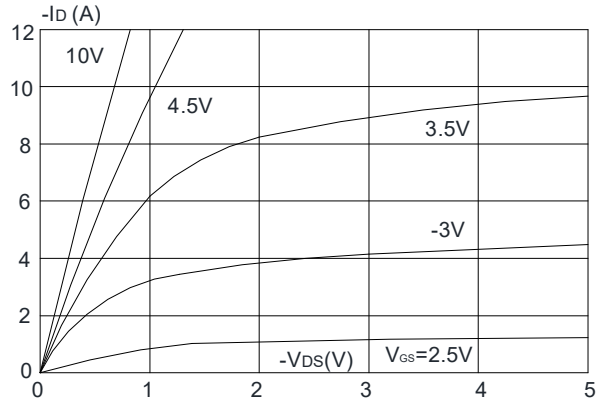

Figure 2: Typical Transfer Characteristics

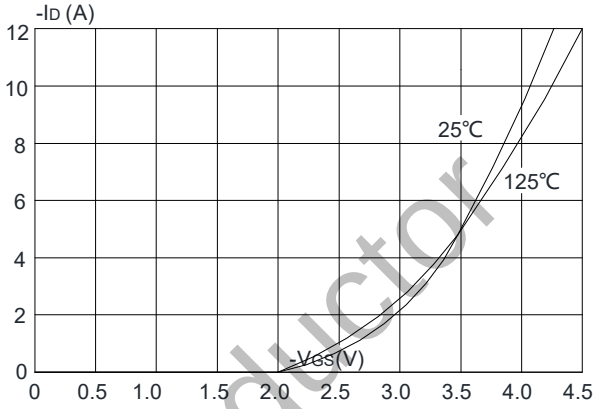

Figure 3: On-resistance vs. Drain Current

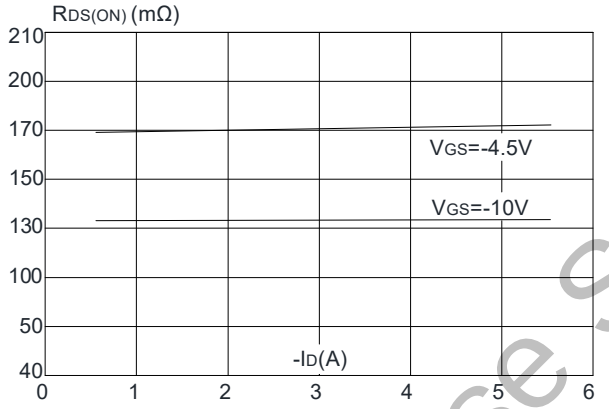

Figure 4: Body Diode Characteristics

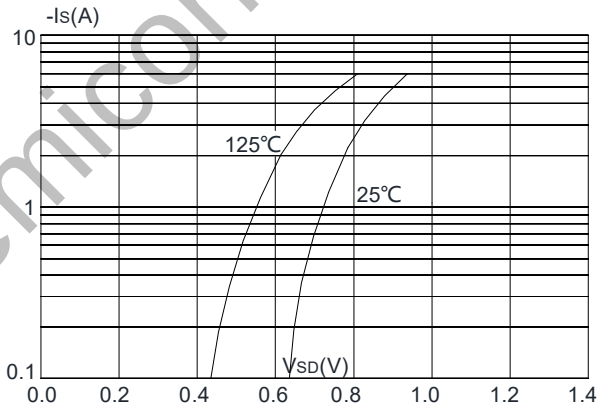

Figure 5: Gate Charge Characteristics

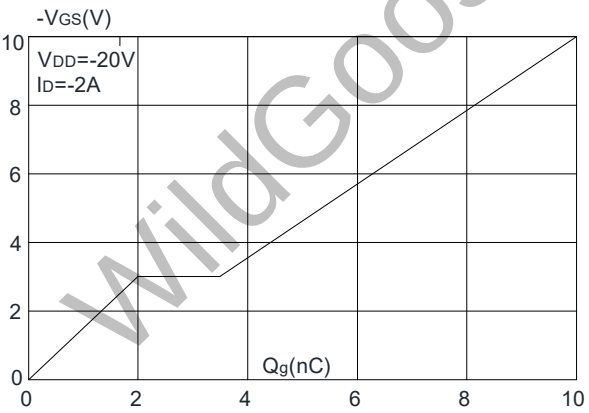

Figure 6: Capacitance Characteristics

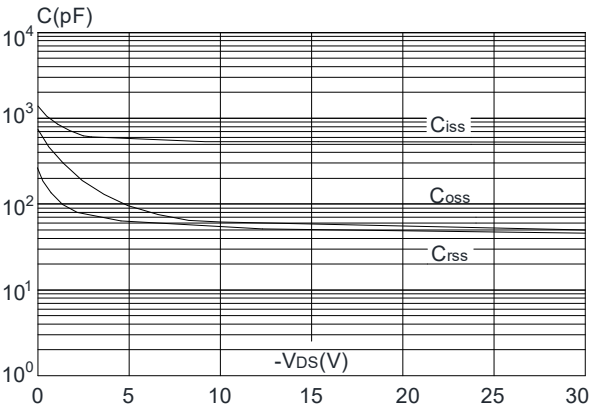

WildGoose Semiconductor

Figure 7: Normalized Breakdown Voltage vs. Junction Temperature

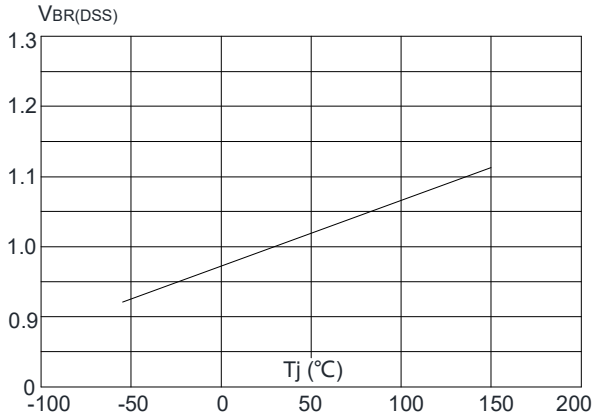

Figure 8: Normalized on Resistance vs. Junction Temperature

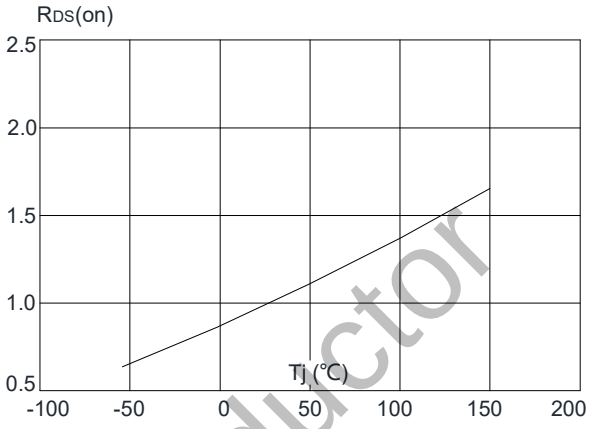

Figure 9: Maximum Safe Operating Area

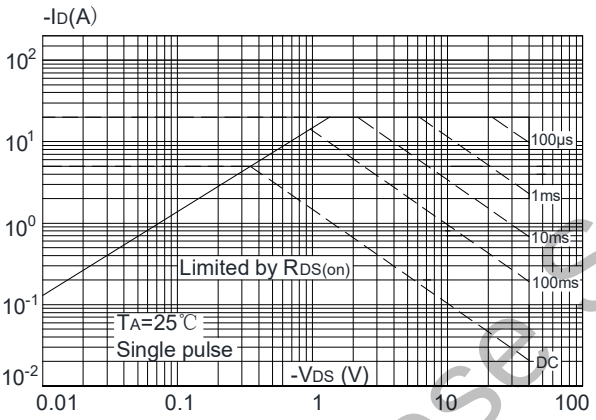

Figure 10: Maximum Continuous Drain Current vs. Ambient Temperature

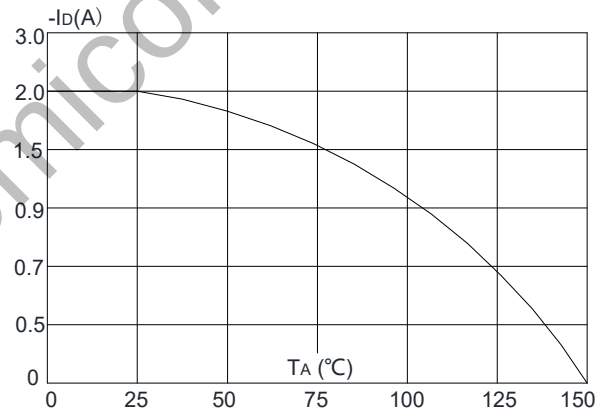

Figure 11: Maximum Effective Transient Thermal Impedance, Junction-to-Ambient

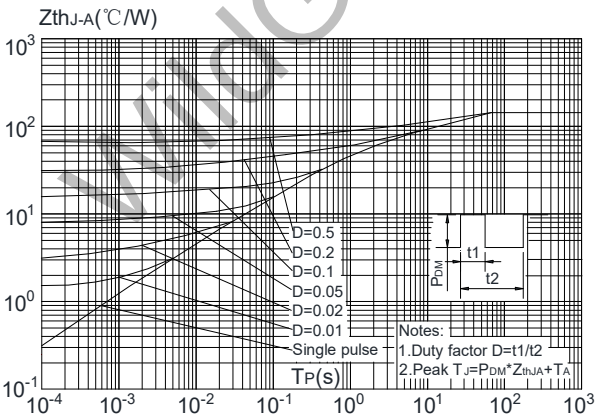

WildGoose Semiconductor

Test Circuit

Gate Charge Test Circuit & Waveform

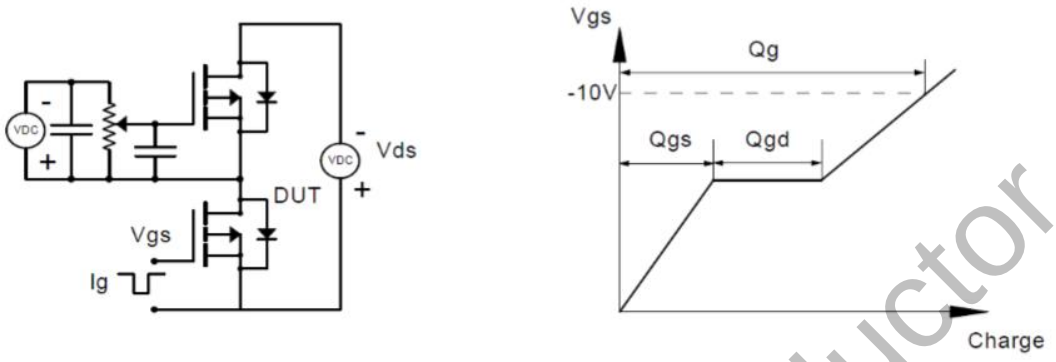

Resistive Switching Test Circuit & Waveforms

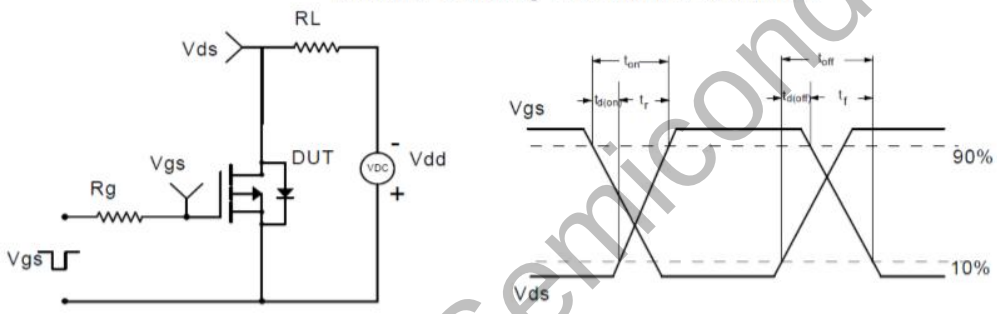

Unclamped Inductive Switching (UIS) Test Circuit & Waveforms

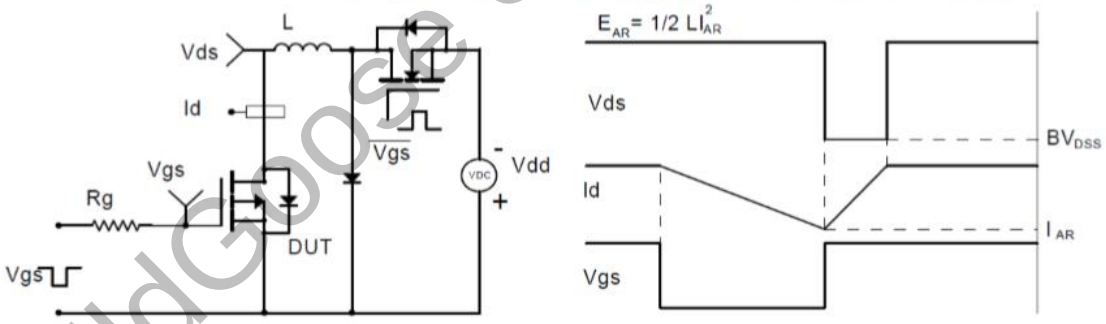

Diode Recovery Test Circuit & Waveforms

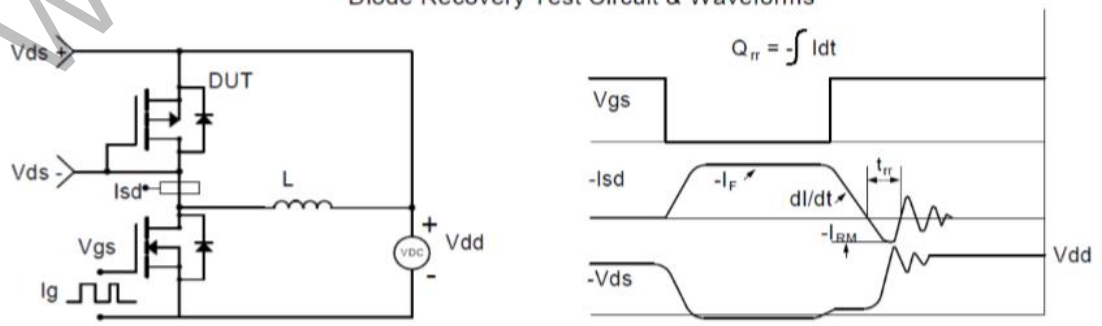

WildGoose Semiconductor

Package Dimension

SOT-23

Unit: mm

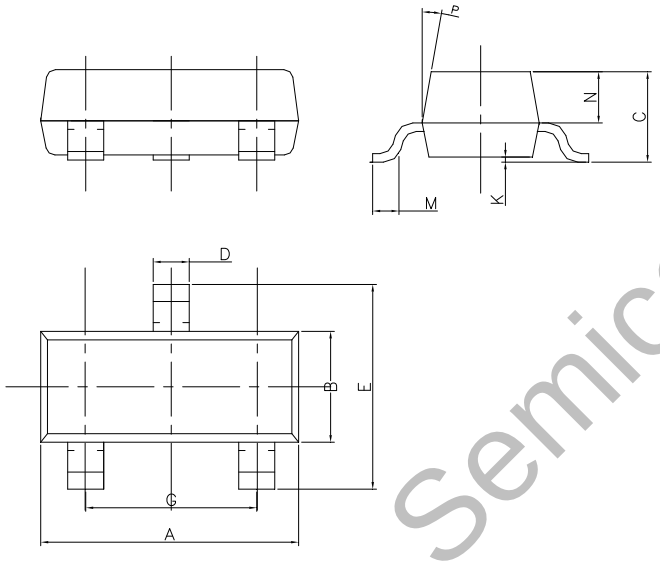

DIM	MILLIMETERS
A	2.85~3.04
B	1.30±0.10
C	1.00±0.10
D	0.45±0.05
E	2.25~2.55
G	1.90±0.1
K	0.00−0.10
M	0.20 MIN
N	0.60±0.10
P	7±2°

SOT-23 Suggested Pad Layout

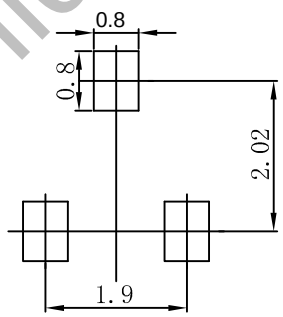

Note:
1.Controlling dimension:in millimeters.
2.General tolerance:±0.05mm.
3.The pad layout is for reference purposes only.

WildGoose Semiconductor